ACCELERATOR PEDAL ASSY (1AZ–FSE/1CD–FTV)

100FM–02

REPLACEMENT

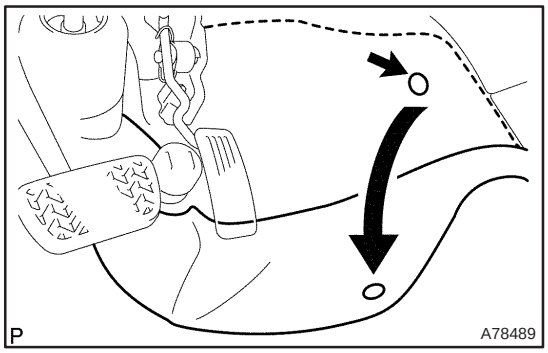

1. REMOVE ACCELERATOR PEDAL

(a) Using a clip remover, remove the clip.

(b) Open the floor carpet.

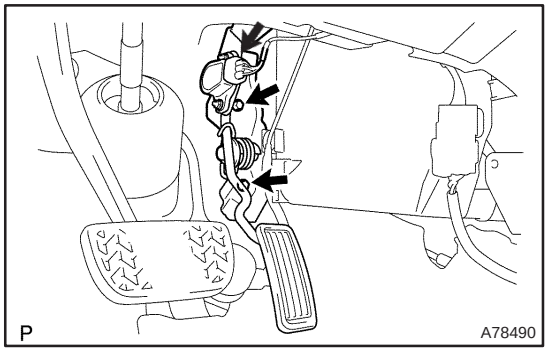

(c) Disconnect the accelerator position sensor connector.

(d) Remove the 2 bolts, and then remove the accelerator pedal.

2. INSTALL ACCELERATOR PEDAL
Torque: 5.4 N·m (55 kgf·cm, 48 in.·lbf)

cardiagn.com

CAMSHAFT POSITION SENSOR (1CD–FTV)

REPLACEMENT

100FP–01

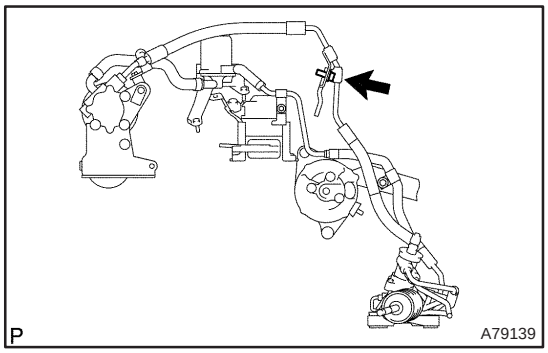

1. SEPARATE RETURN TUBE SUB–ASSY

(a) Remove the bolt and separate the return tube sub–assy.

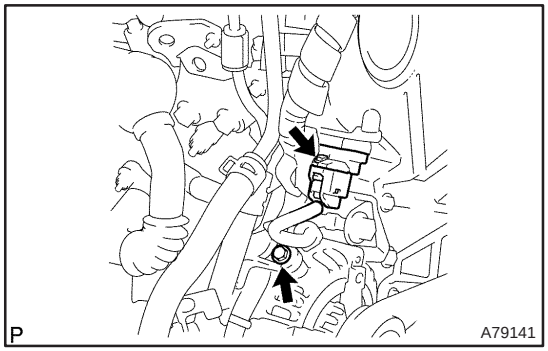

2. REMOVE CAMSHAFT POSITION SENSOR

(a) Remove the bolt and disconnect the wire harness.

(b) Disconnect the connector, remove the bolt and the camshaft position sensor.

3. INSTALL CAMSHAFT POSITION SENSOR

Torque:
8.8 N·m (90 kgf·cm, 79 in.·lbf) for camshaft position sensor
5.0 N·m (51 kgf·cm, 44 in.·lbf) for wire harness

4. INSTALL RETURN TUBE SUB–ASSY

Torque: 9.0 N·m (92 kgf·cm, 80 in.·lbf)

cardiagn.com

CRANKSHAFT POSITION SENSOR (1CD–FTV)

100FQ–01

REPLACEMENT

1. REMOVE ENGINE UNDER COVER RH

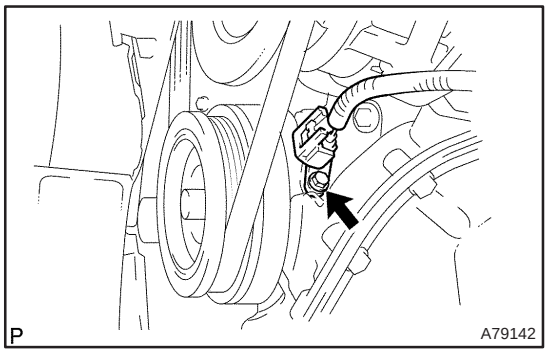

2. REMOVE CRANKSHAFT POSITION SENSOR

(a) Disconnect the connector, remove the bolt and the crankshaft position sensor.

3. INSTALL CRANKSHAFT POSITION SENSOR
Torque: 8.8 N·m (90 kgf·cm, 78 in.·lbf)

cardiagn.com

100F0–02

INSPECTION

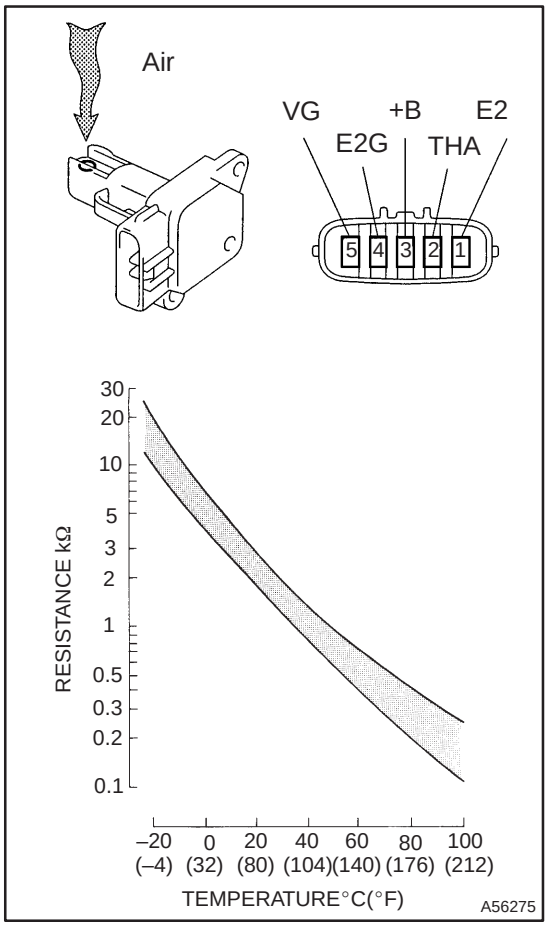

1. INSPECT MASS AIR FLOW METER

(a) Output voltage inspection.

(1) Apply battery voltage across terminals 3 (+B) and 4 (E2G)

(2) Using a voltmeter, connect the positive (+) tester probe to terminal VG, and negative (–) tester probe to terminal E2G.

(3) Blow air into the air flow meter, and check that the voltage fluctuates.

(b) Resistance inspection.

(1) Using an ohmmeter, measure the resistance between terminals 2 (THA) and 1 (E2).

Resistance:

–20°C (–4°F) 12.5 to 16.9 kΩ
20°C (68°F) 2.19 to 2.67 kΩ
60°C (140°F) 0.50 to 0.68 kΩ

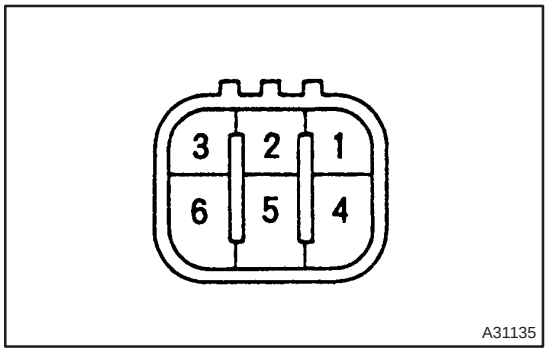

2. INSPECT INTAKE SHUTTER ASSY

(a) Resistance inspection (Throttle control motor)

(1) Using an ohmmeter, measure the resistance between terminals.

Resistance:

Terminals	Temperature	Resistance
2 – 1, 3	at 20°C (68°F)	18 to 22 kΩ
5 – 4, 6	at 20°C (68°F)	18 to 22 kΩ

cardiagn.com

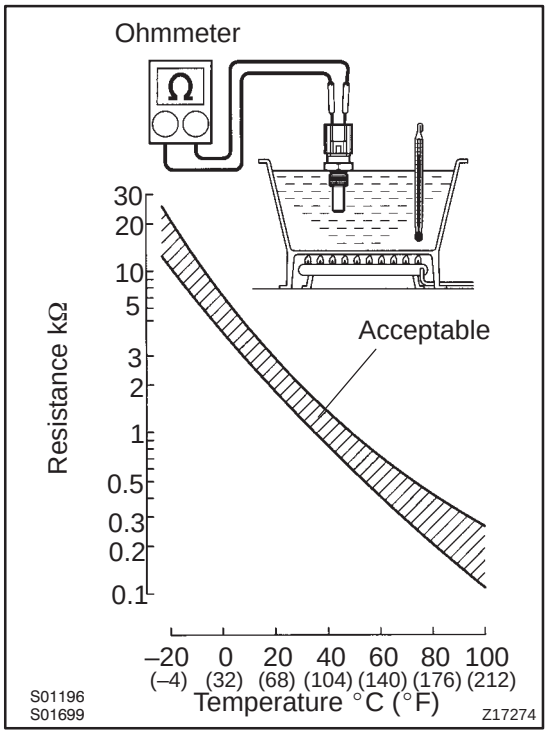

3. INSPECT DIESEL ENGINE ENGINE COOLANT TEMPERATURE SENSOR

(a) Resistance inspection.

(1) Using an ohmmeter, measure the resistance between each terminal.

Resistance:

Approx. 20°C (68°F) 2.32 to 2.59 kΩ

Approx. 80°C (176°F) 0.310 to 0.326 kΩ

NOTICE:

In case of checking the water temperature sensor in the water, be careful not to allow water to go into the terminals, and after checking, wipe out the sensor.

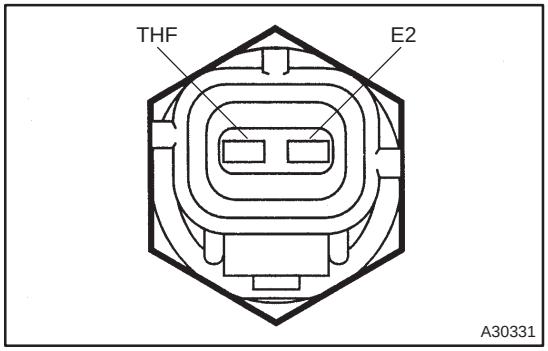

4. INSPECT INJECTION OR SUPPLY PUMP ASSY

(a) Resistance inspection. (Fuel temperature sensor)

(1) Using an ohmmeter, measure the resistance between each terminal.

Resistance:

Approx. 20°C (68°F) 2.21 to 2.69 kΩ

Approx. 80°C (176°F) 0.287 to 0.349 kΩ

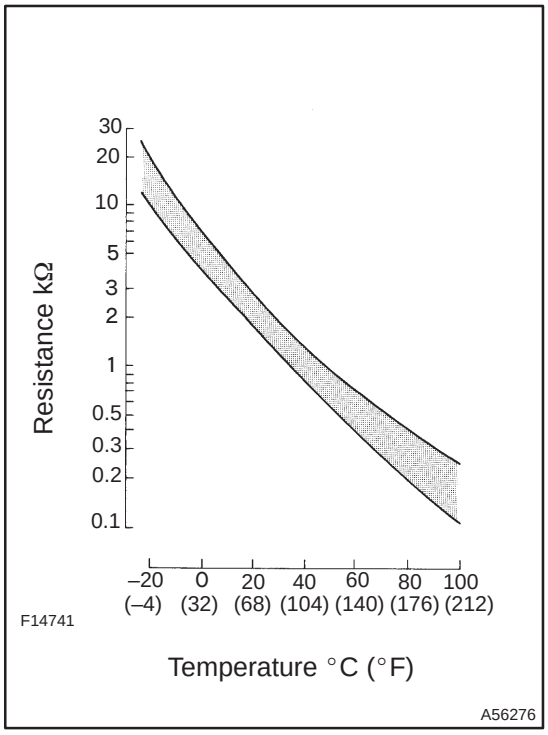

5. INSPECT DIESEL TURBO INLET AIR TENPERATURE SENSOR

(a) Resistance inspection.

(1) Using an ohmmeter, measure the resistance between each terminal.

Resistance:

Approx. 20°C (68°F) 2.21 to 2.65 kΩ

cardiagn.com

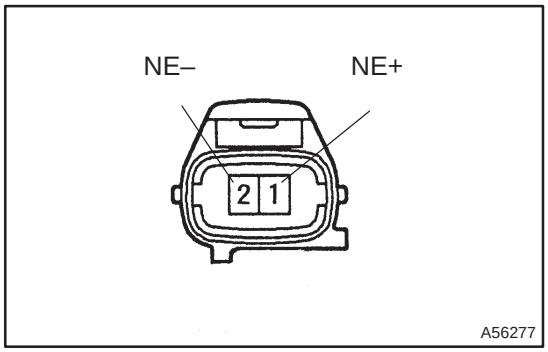

6. INSPECT CRANKSHAFT POSITION SENSOR

(a) Resistance inspection.

(1) Using an ohmmeter, measure the resistance between terminals.

Resistance:
at cold 1630 to 2740 Ω
at hot 2065 to 3225 Ω

NOTICE:
"Cold" and "Hot" in the following sentences express the temperature of the sensor itself. "Cold" is from –10°C (14°F) to 50°C (122°F) and "Hot" is from 50°C (122°F) to 100°C (212°F).

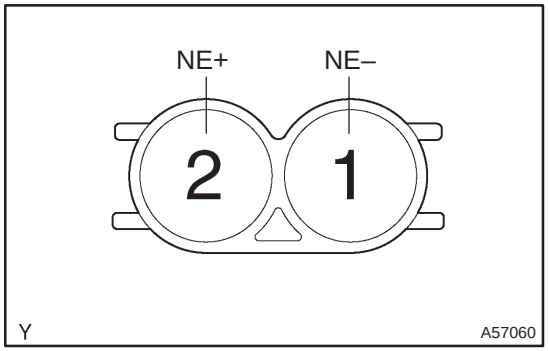

7. INSPECT CAMSHAFT POSITION SENSOR

(a) Resistance inspection.

(1) Using an ohmmeter, measure the resistance between terminal.

Resistance:
at cold 1630 to 2740 Ω
at hot 2065 to 3225 Ω

NOTICE:
"Cold" and "Hot" in the following sentences express the temperature of the sensor itself. "Cold" is from –10°C (14°F) to 50°C (122°F) and "Hot" is from 50°C (122°F) to 100°C (212°F).

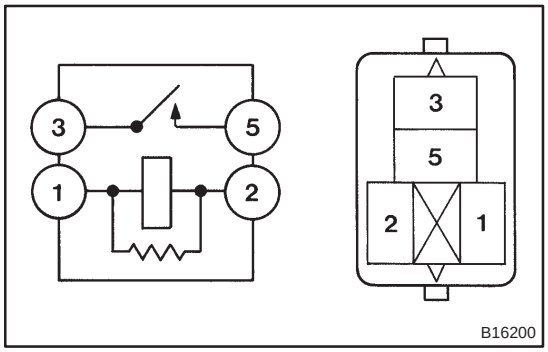

8. INSPECT EDU RELAY

(a) Inspect the relay continuity.

(1) Using an ohmmeter, check that there is continuity between terminals 1 and 2.

Specified condition: Continuity

(2) Check that there is no continuity between terminals 3 and 5.

Specified condition: No continuity

(b) Inspect the relay operation.

(1) Apply battery voltage across terminals 1 and 2.

(2) Using an ohmmeter, check that there is continuity between terminals 3 and 5.

Specified condition: Continuity

cardiagn.com

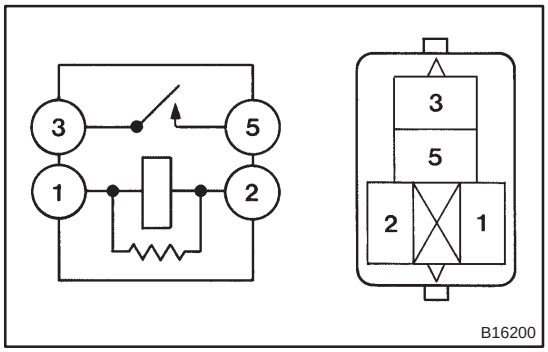

9. INSPECT EFI MAIN RELAY

(a) Inspect the relay continuity.

(1) Using an ohmmeter, check that there is continuity between terminals 1 and 2.

Specified condition: Continuity

(2) Check that there is no continuity between terminals 3 and 5.

Specified condition: No continuity

(b) Inspect the relay operation.

(1) Apply battery voltage across terminals 1 and 2.

(2) Using an ohmmeter, check that there is continuity between terminals 3 and 5.

Specified condition: Continuity

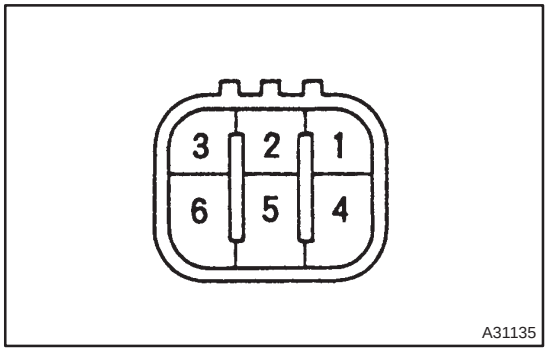

10. INSPECT ACCELERATOR PEDAL ASSY

(a) Inspect the accel position sensor.

(1) Using an ohmmeter, measure the resistance between each terminal.

Resistance:

RHD:

Betweenterminal	Resistance
5 (VPA1) – 1 (EP1)	5.0 kΩ or less
2 (VPA2) – 3 (EP2)	5.0 kΩ or less
4 (VCP1) – 1 (EP1)	1.5 to 6.0 kΩ
6 (VCP2) – 3 (EP2)	1.5 to 6.0 kΩ

LHD:

Betweenterminal	Resistance
3 (VPA1) – 4 (EP1)	5.0 kΩ or less
6 (VPA2) – 5 (EP2)	5.0 kΩ or less
2 (VCP1) – 4 (EP1)	1.5 to 6.0 kΩ
1 (VCP2) – 5 (EP2)	1.5 to 6.0 kΩ

cardiagn.com

ECD SYSTEM (1CD–FTV)

ON–VEHICLE INSPECTION

100EZ–02

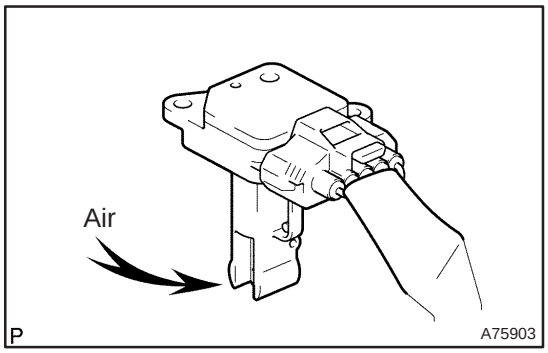

1. INSPECT MASS AIR FLOW METER

(a) If you have hand–held tester:
Inspect for operation
(1) Connect the hand–held tester to the DLC3.
(2) Turn the ignition switch ON.
(3) Blow air into the MAF meter, and check that the air flow fluctuates (MAF) of the CURRENT DATA shown the standard value.

If operation is not as specified, check the MAF meter (See page 10–56), wiring and ECM.

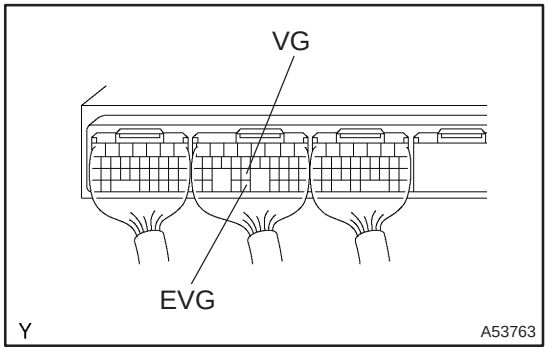

(b) If you have no hand–held tester:
Inspect for operation
(1) Turn the ignition switch ON.
(2) Connect the positive tester probe of the voltmeter to the terminal VG of the ECM. and the negative tester probe of the voltmeter to the terminal EVG of the ECM.
(3) Blow air into the MAF meter, and check that the voltage fluctuates.

If operation is not as specified, check the MAF meter (See page 10–56), wiring and ECM.

2. INSPECT INTAKE SHUTTER

(a) Inspect the throttle control motor for operating sound.
(1) Turn the ignition switch ON.
(2) When turning the accelerator pedal position sensor lever, check the running sound of the motor. Also, check that there is no friction sound.

If operation is not as specified, check the throttle control motor (See page 10–56), wiring and ECM.

(b) Inspect the throttle position sensor.
(1) Connect the hand–held tester to the DLC3.
(2) Turn the ignition switch ON.
(3) When turning the accelerator pedal position sensor lever to the full–open position, check that the throttle valve opening percentage (THROTTLE POS) of the CURRENT DATA shown the standard value.

Standard throttle valve opening percentage:
60 % or more

If operation is not as specified, check that the accelerator pedal position sensor (See page 10–56), wiring and ECM.

If you have no hand–held tester, measure voltage between terminals (LU+A – LU–A, LU+B – LU–B) of the ECM connector (See page 05–549).

cardiagn.com

(c) Inspect the air assist system.
  (1) Start the engine and check that the CHK ENG does not light up.
  (2) Allow the engine to warm up to normal operating temperature.
  (3) Turn the A/C compressor ON to OFF, and check the idle speed.
  Idle speed (Transmission in neutral): 800 ± 50 rpm

NOTICE:
Perform inspection under condition without electrical load.

(d) After checking the above (b) to (d), perform the driving test and check that there is no sense of incongruity.

3. INSPECT ACCELERATOR PEDAL POSITION SENSOR

(a) Connect the hand–held tester to the DLC3.
(b) Turn the ignition switch ON.
(c) Check that the voltage (ACCEL POS) of the CURRENT DATA shown the standard value.
  Accelerator pedal released: 0.5 to 1.1 V
  Accelerator pedal depress: 2.6 to 4.5 V
(d) Check that the voltage (ACCEL POS #2) of the CURRENT DATA shown the standard value.
  Accelerator pedal released: 1.2 to 2.0 V
  Accelerator pedal depress: 3.4 to 5.3 V

If you have no hand–held tester, measure voltage between terminals (VPA1 – EP1, VPA2 – EP2) of the ECM connector (See page 05–549).

cardiagn.com

ECM

REPLACEMENT

100FR–01

HINT:

1CD–FTV Engine Type:

Each injector assembly has a characteristic fuel injecting behavior. The ECM stores compensation codes which are used to optimize fuel injection for the injectors. When replacing the ECM, the compensation codes must be set to the new ECM.

1. REMOVE GLOVE COMPARTMENT DOOR ASSY (See page 71–11)

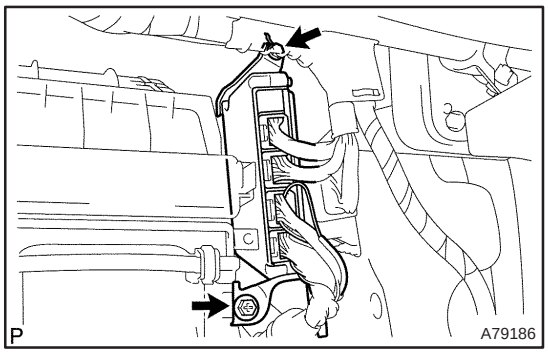

2. REMOVE ECM

(a) Disconnect the 4 ECM connectors (1ZZ–FE, 3ZZ–FE, 1AZ–FE, 1CD–FTV).

(b) Disconnect the 5 ECM connectors (1AZ–FSE).

(c) Disconnect the wire harness clamp.

(d) Remove the bolt and screw, then remove the ECM.

(e) Remove the 2 screws and the ECM bracket No. 1 from the ECM.

(f) Remove the 2 screws and the ECM bracket No. 2 from the ECM.

3. INSTALL ECM

Torque: 5.5 N·m (56 kgf·cm, 49 in.·lbf)

4. INSTALL GLOVE COMPARTMENT DOOR ASSY (See page 71–11)

5. REGISTRATION OF INJECTOR COMPENSATION CODE (1CD–FTV ENGINE TYPE) (See page 05–528)

cardiagn.com

INTAKE SHUTTER ASSY (1CD–FTV)

COMPONENTS

100FN–01

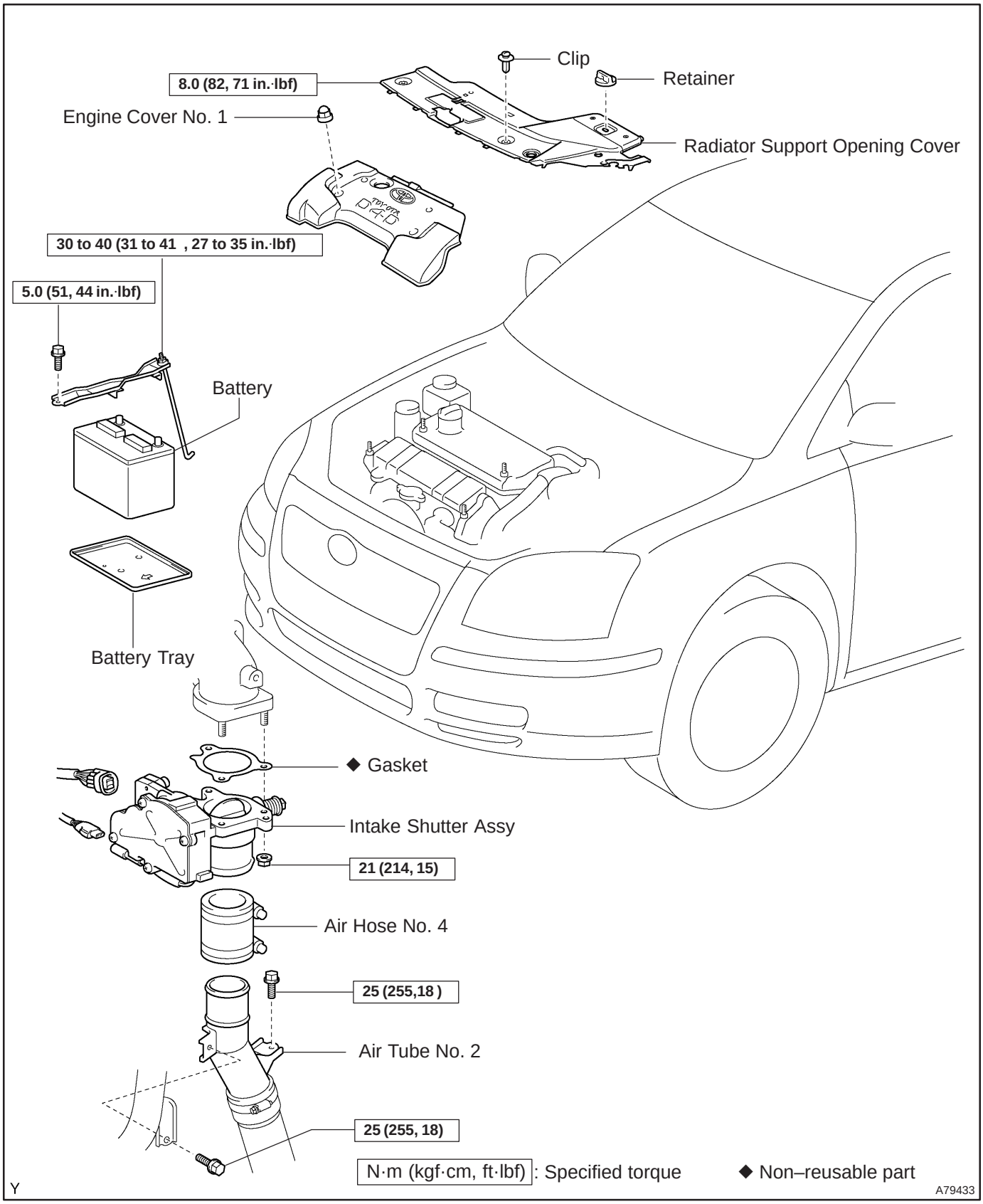

cardiagn.com

100FO–01

Removal & Installation and Disassembly & Reassembly

1. REMOVE RADIATOR SUPPORT OPENING COVER

2. REMOVE ENGINE COVER NO.1

(a) Remove the 5 nuts and the engine cover.

3. REMOVE BATTERY

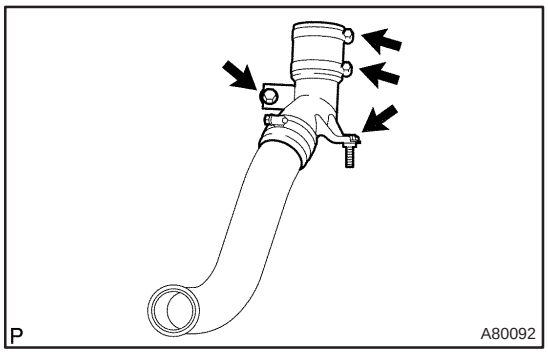

4. REMOVE AIR HOSE NO.4

(a) Loosen the 2 hose clamps.

(b) Remove the 2 bolts and separate the air tube No. 2.

(c) Remove the air hose No. 4.

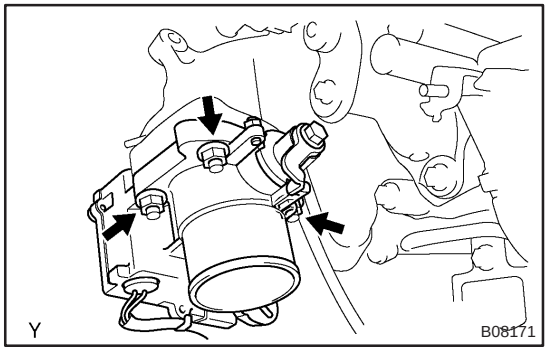

5. REMOVE INTAKE SHUTTER ASSY

(a) Disconnect the 2 connectors.

(b) Remove the 3 nuts, then remove the intake shutter and the gasket.

6. INSTALL INTAKE SHUTTER ASSY

(a) Install a new gasket and the intake shutter with the 3 nuts.
Torque: 21 N·m (214 kgf·cm, 15 ft·lbf)

7. INSTALL AIR HOSE NO.4

(a) Install the air hose No. 4 to the air tube No. 2.

(b) Install the air tube No. 2 with the 2 bolts.
Torque: 25 N·m (255 kgf·cm, 18 ft·lbf)

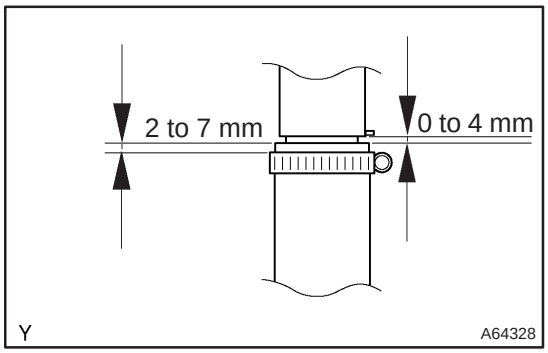

(c) Install the air hose and hose clamp as shown in the illustration.

cardiagn.com

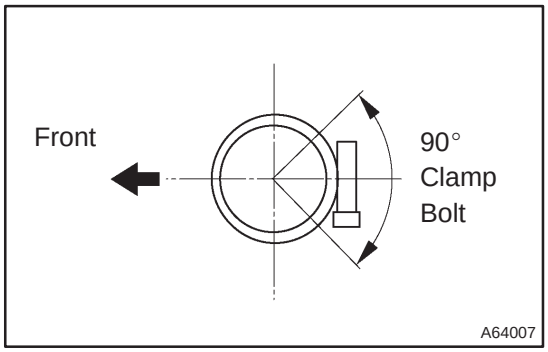

(d) Tighten the hose clamp as shown in the illustration.
Torque: 6.0 N·m (61 kgf·cm, 53 in.·lbf)

8. INSTALL ENGINE COVER NO.1

(a) Install the engine cover with the 5 nuts.
Torque: 8.0 N·m (82 kgf·cm, 71 in.·lbf)

9. INSTALL BATTERY

Torque:
5.0 N·m (51 kgf·cm, 44 in.·lbf) for bolt
3.0 to 4.0 N·m (31 to 41 kgf·cm, 27 to 35 in.·lbf) for nut

cardiagn.com

KNOCK SENSOR (1AZ–FE)

COMPONENTS

100FK–01

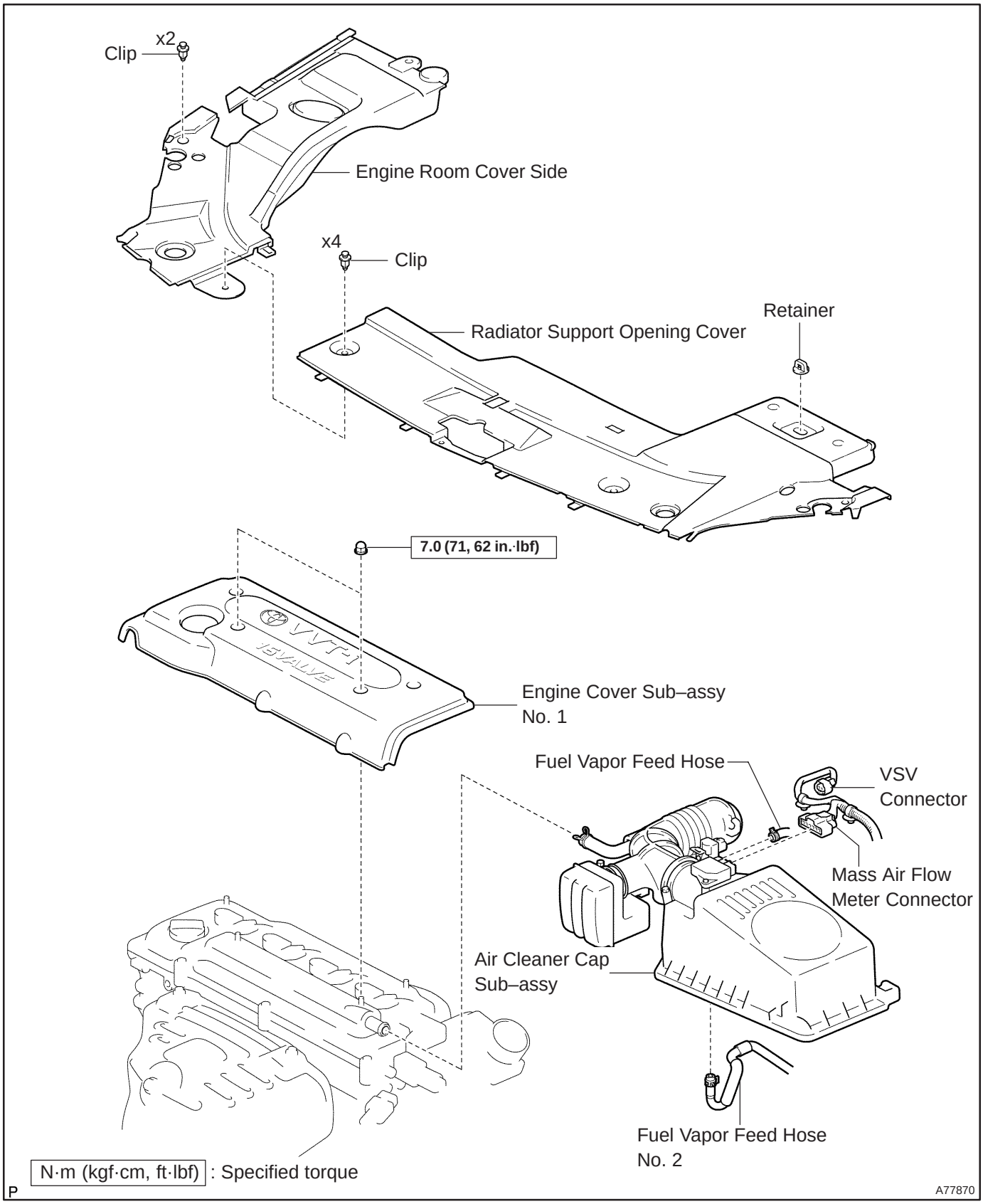

cardiagn.com

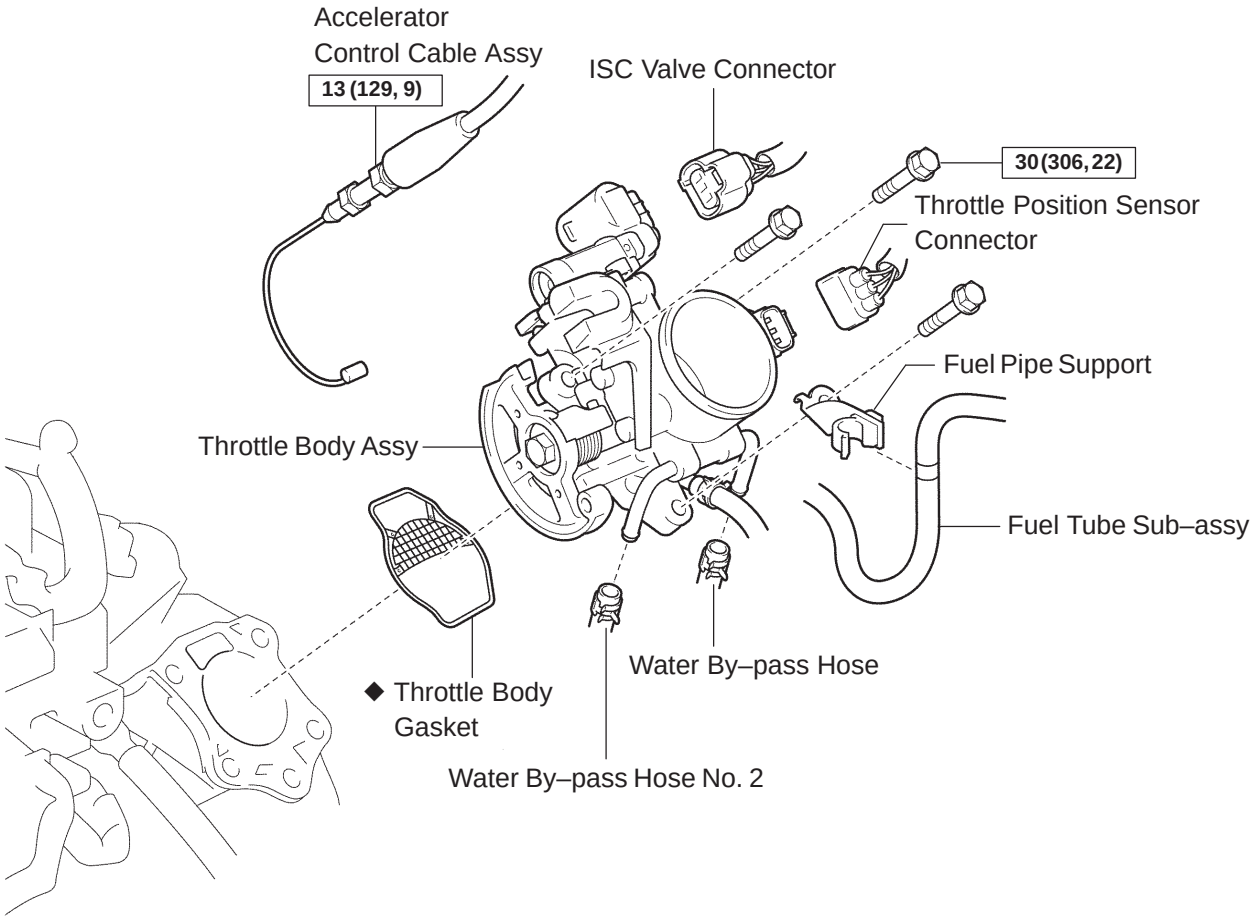

N·m (kgf·cm, ft·lbf) : Specified torque
◆ Non–reusable part

A78452

cardiagn.com

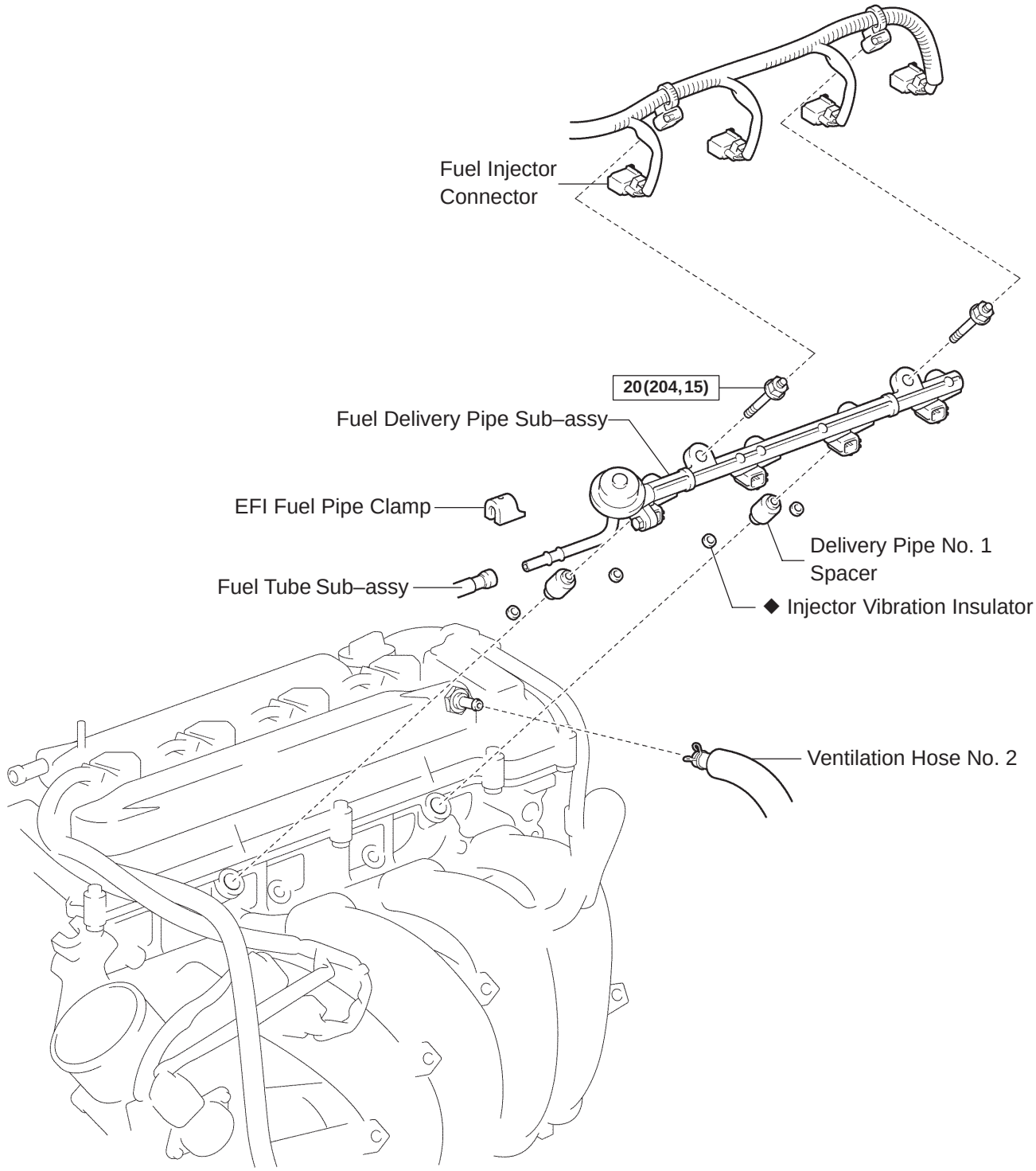

N·m (kgf·cm, ft·lbf) : Specified torque
◆ Non–reusable part

P A78453

cardiagn.com

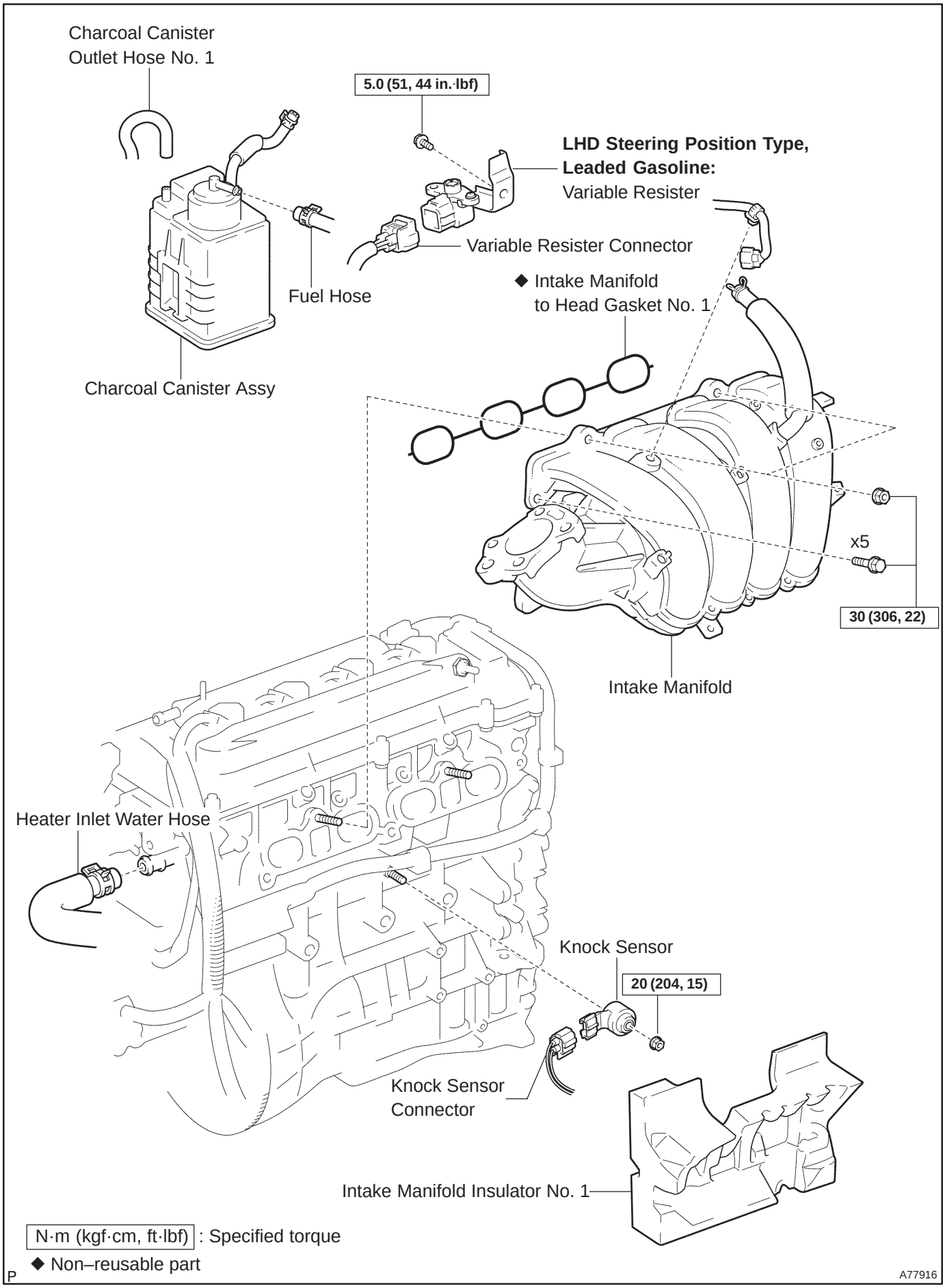

cardiagn.com

100FL–01

REPLACEMENT

1. **DISCHARGE FUEL SYSTEM PRESSURE (See page 11–15)**
2. **REMOVE ENGINE ROOM COVER SIDE (See page 10–26)**
3. **REMOVE RADIATOR SUPPORT OPENING COVER (See page 10–26)**
4. **ENGINE COOLANT (See page 16–19)**
5. **REMOVE ENGINE COVER SUB–ASSY NO.1 (See page 10–26)**
6. **REMOVE AIR CLEANER CAP SUB–ASSY (See page 10–26)**
7. **SEPARATE ACCELERATOR CONTROL CABLE ASSY (See page 10–26)**
8. **REMOVE THROTTLE BODY ASSY (See page 10–26)**
9. **DISCONNECT FUEL TUBE SUB–ASSY (See page 11–26)**
   SST 09268–21010
10. **REMOVE FUEL DELIVERY PIPE SUB–ASSY (See page 11–26)**

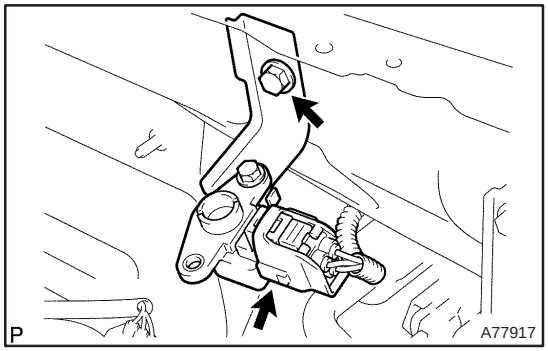

11. **REMOVE VARIABLE RESISTOR (LHD STEERING POSITION TYPE, LEADED GASOLINE)**
(a) Disconnect the variable resistor connector.
(b) Remove the bolt, and then remove the variable resistor.

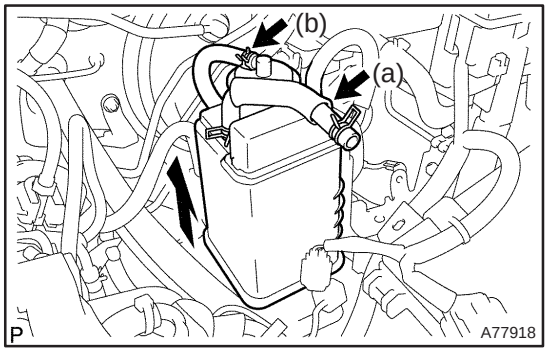

12. **REMOVE CHARCOAL CANISTER ASSY**
(a) Disconnect the charcoal canister outlet hose No. 1.
(b) Disconnect the fuel hose.
(c) Pull up and remove the charcoal canister.

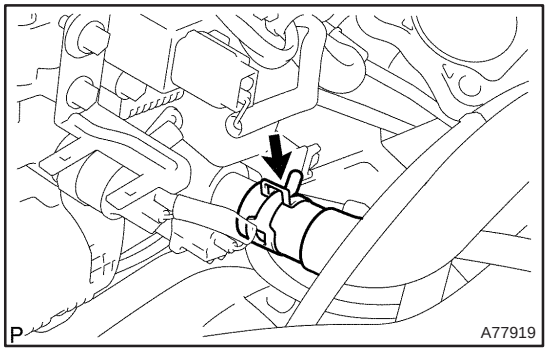

13. **DISCONNECT HEATER INLET WATER HOSE**

cardiagn.com

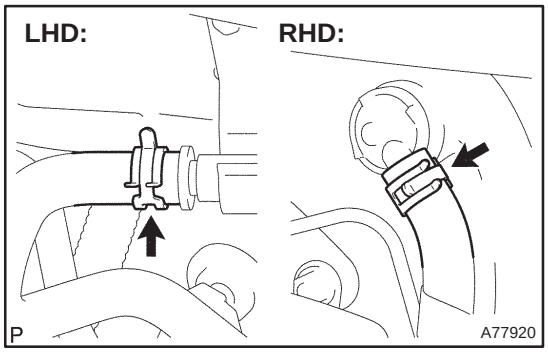

14. REMOVE INTAKE MANIFOLD

(a) Disconnect the union to connector tube hose.

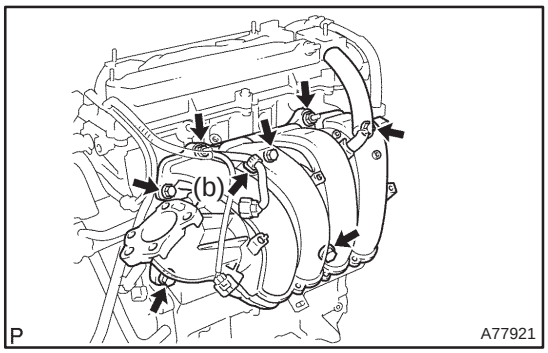

(b) Remove the wire harness clamp.

(c) Remove the 5 bolts and 2 nuts, and then remove the intake manifold.

(d) Remove the gasket from the intake manifold.

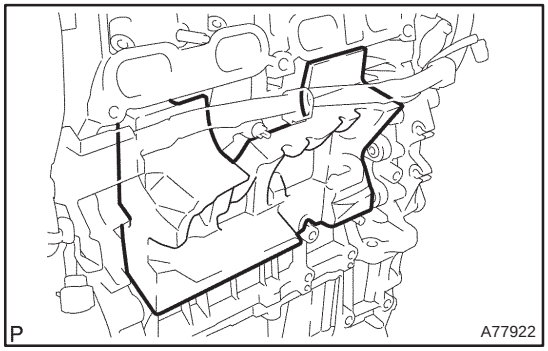

15. REMOVE INTAKE MANIFOLD INSULATOR NO.1

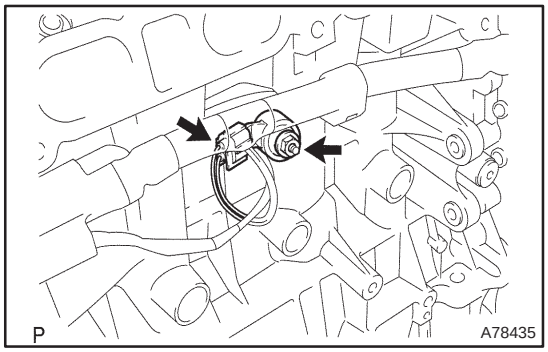

16. REMOVE KNOCK SENSOR

(a) Disconnect the knock sensor connector.

(b) Remove the nut, and then remove the knock sensor.

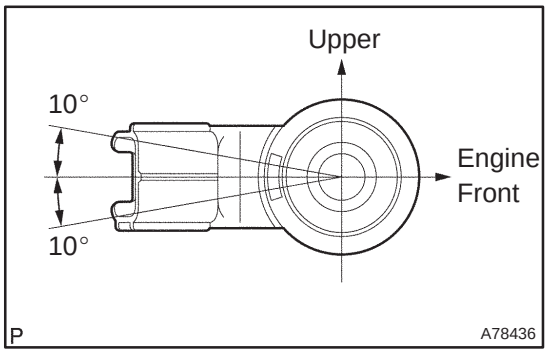

17. INSTALL KNOCK SENSOR

(a) Install the knock sensor with the nut as shown in the illustration.

Torque: 20 N·m (204 kgf·cm, 15 ft·lbf)

(b) Connect the knock sensor connector.

cardiagn.com

18. INSTALL INTAKE MANIFOLD INSULATOR NO.1

19. INSTALL INTAKE MANIFOLD

(a) Install a new gasket to the intake manifold.

(b) Install the intake manifold with the 5 bolts and 2 nuts.
Torque: 30 N·m (306 kgf·cm, 22 ft·lbf)

(c) Install the wire harness clamp.

(d) Connect the union to connector tube hose.

20. CONNECT HEATER INLET WATER HOSE

21. INSTALL CHARCOAL CANISTER ASSY

22. INSTALL VARIABLE RESISTOR (LHD STEERING POSITION TYPE, LEADED GASOLINE)
Torque: 5.0 N·m (51 kgf·cm, 44 in.·lbf)

23. INSTALL FUEL DELIVERY PIPE SUB–ASSY (See page 11–26)

24. CONNECT FUEL TUBE SUB–ASSY (See page 11–26)

25. INSTALL THROTTLE BODY ASSY (See page 10–26)

26. INSTALL ACCELERATOR CONTROL CABLE ASSY (See page 10–26)

27. INSTALL AIR CLEANER CAP SUB–ASSY

28. ADD ENGINE COOLANT (See page 16–19)

29. CHECK FOR ENGINE COOLANT LEAKS (See page 16–13)

30. CHECK FOR FUEL LEAKS (See page 11–19)

31. INSTALL ENGINE COVER SUB–ASSY NO.1 (See page 10–26)

32. INSTALL ENGINE ROOM COVER SIDE

33. INSTALL RADIATOR SUPPORT OPENING COVER

cardiagn.com

KNOCK SENSOR (1AZ–FE)

COMPONENTS

100FK–01

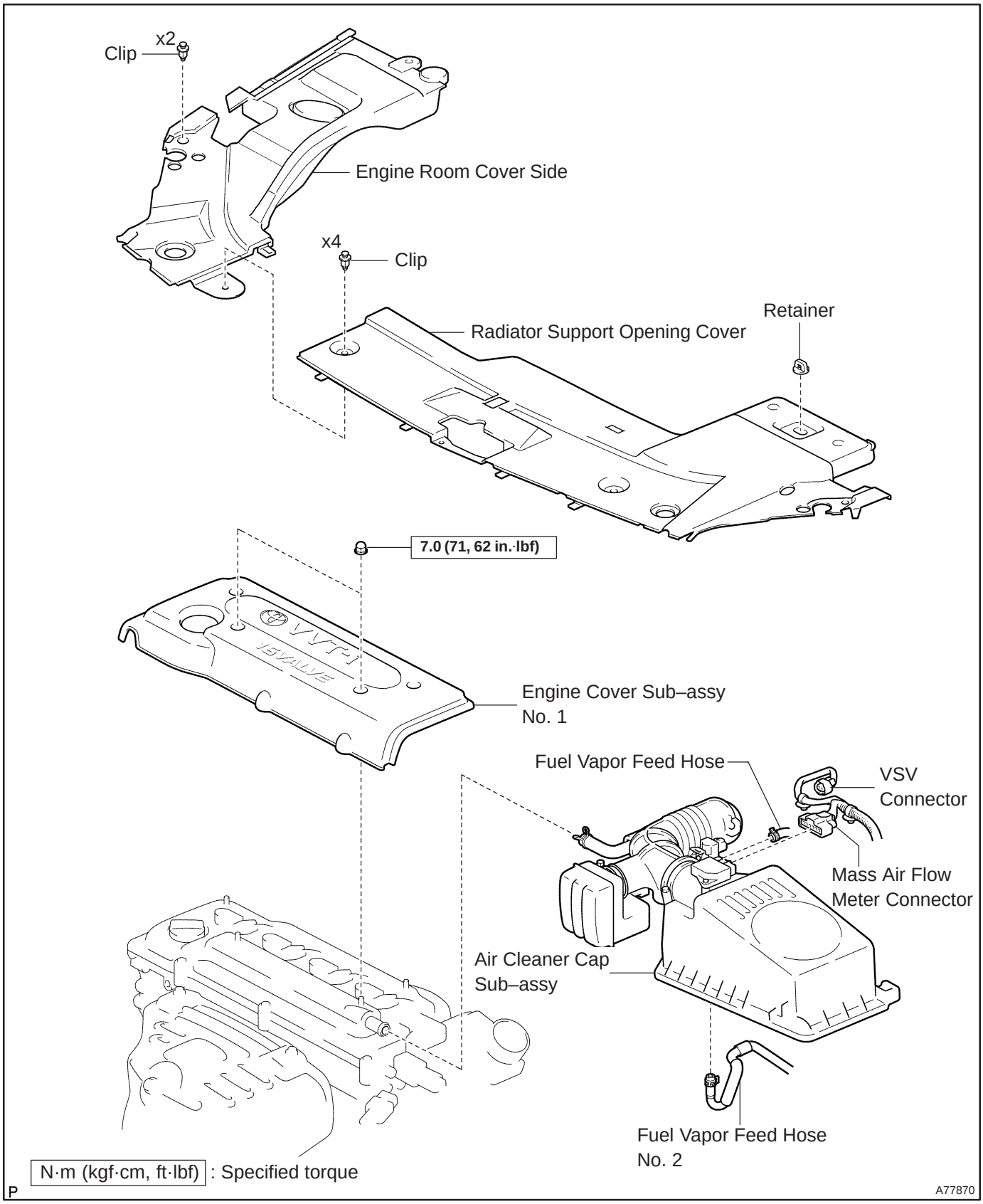

cardiagn.com

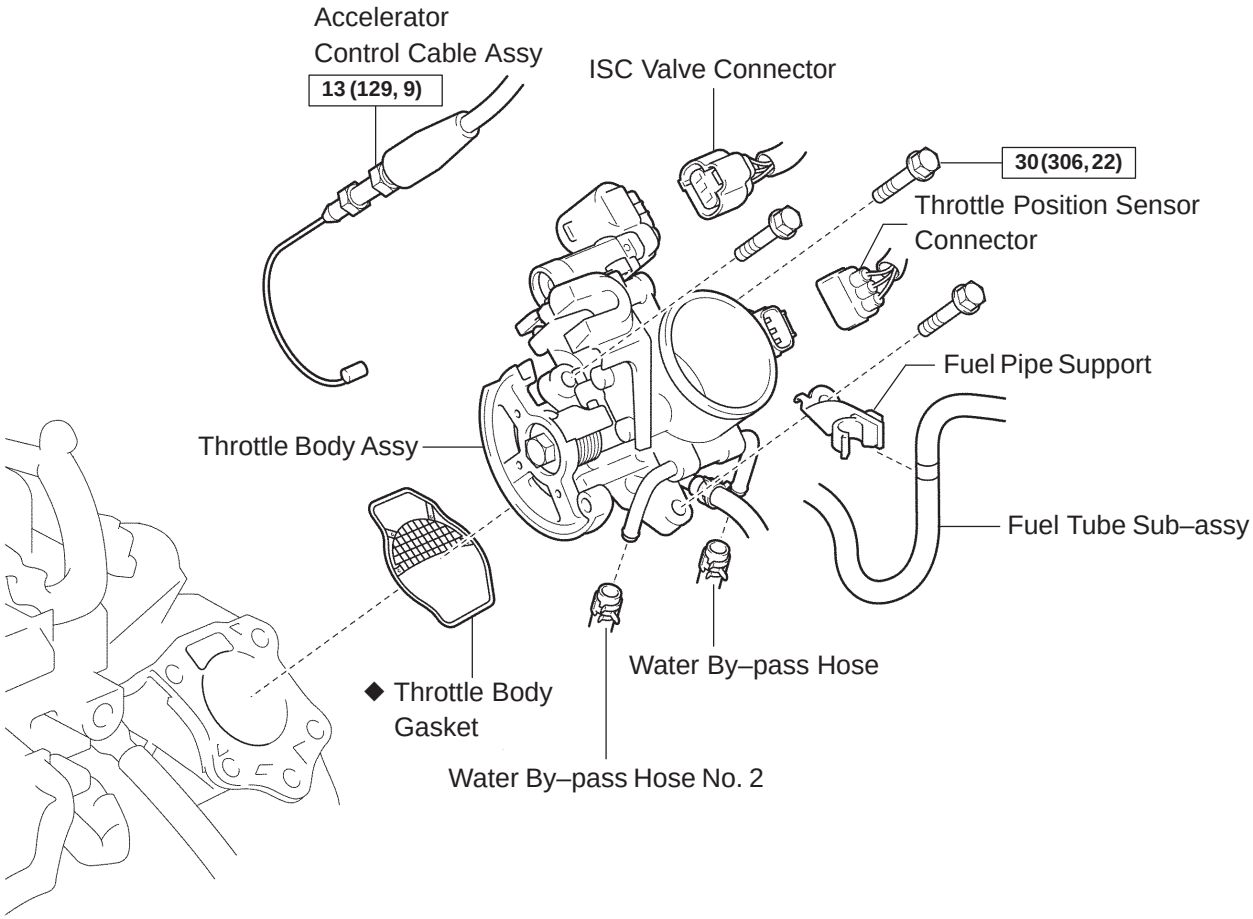

N·m (kgf·cm, ft·lbf) : Specified torque
◆ Non–reusable part

A78452

cardiagn.com

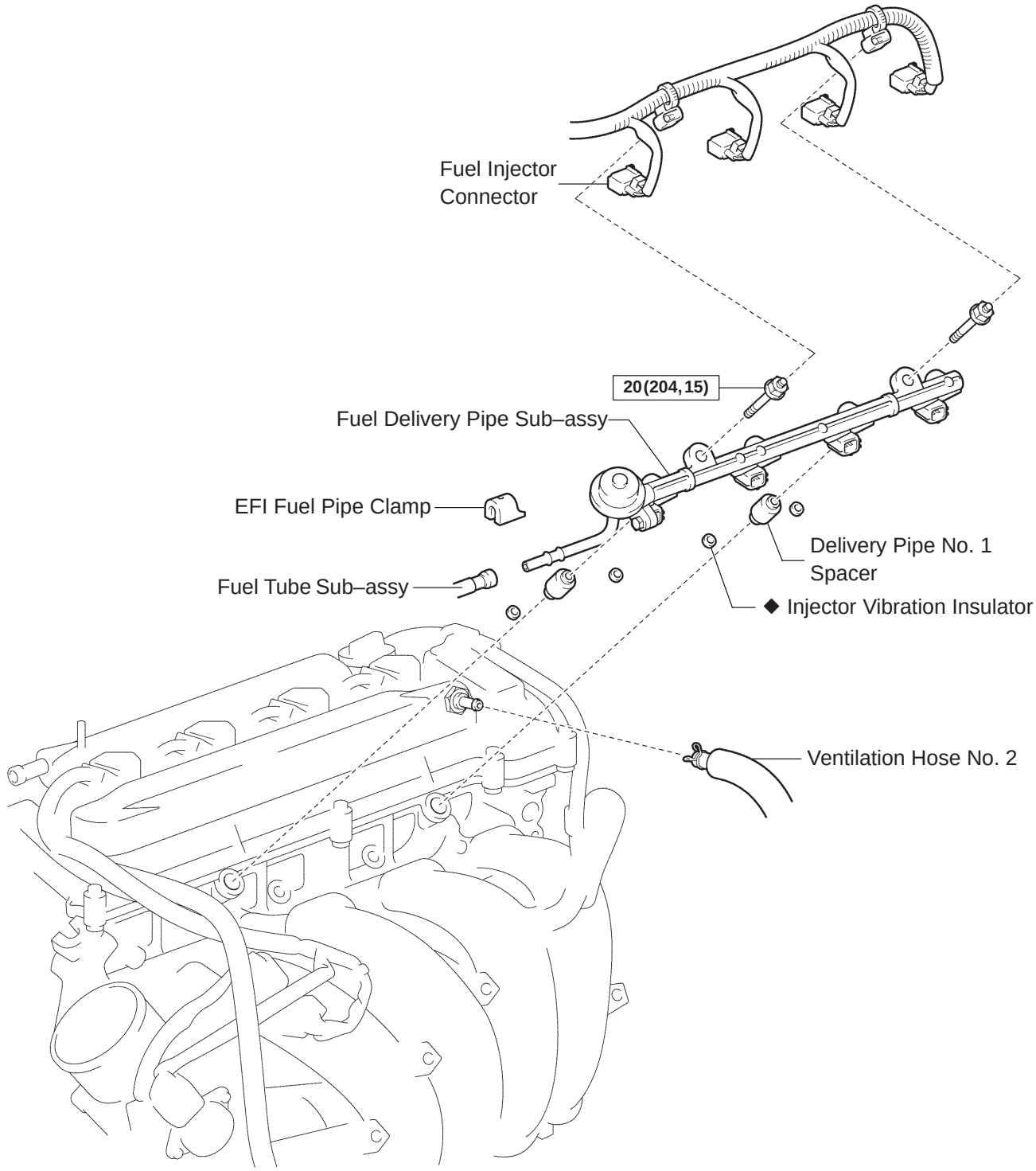

N·m (kgf·cm, ft·lbf) : Specified torque
◆ Non–reusable part

P A78453

cardiagn.com

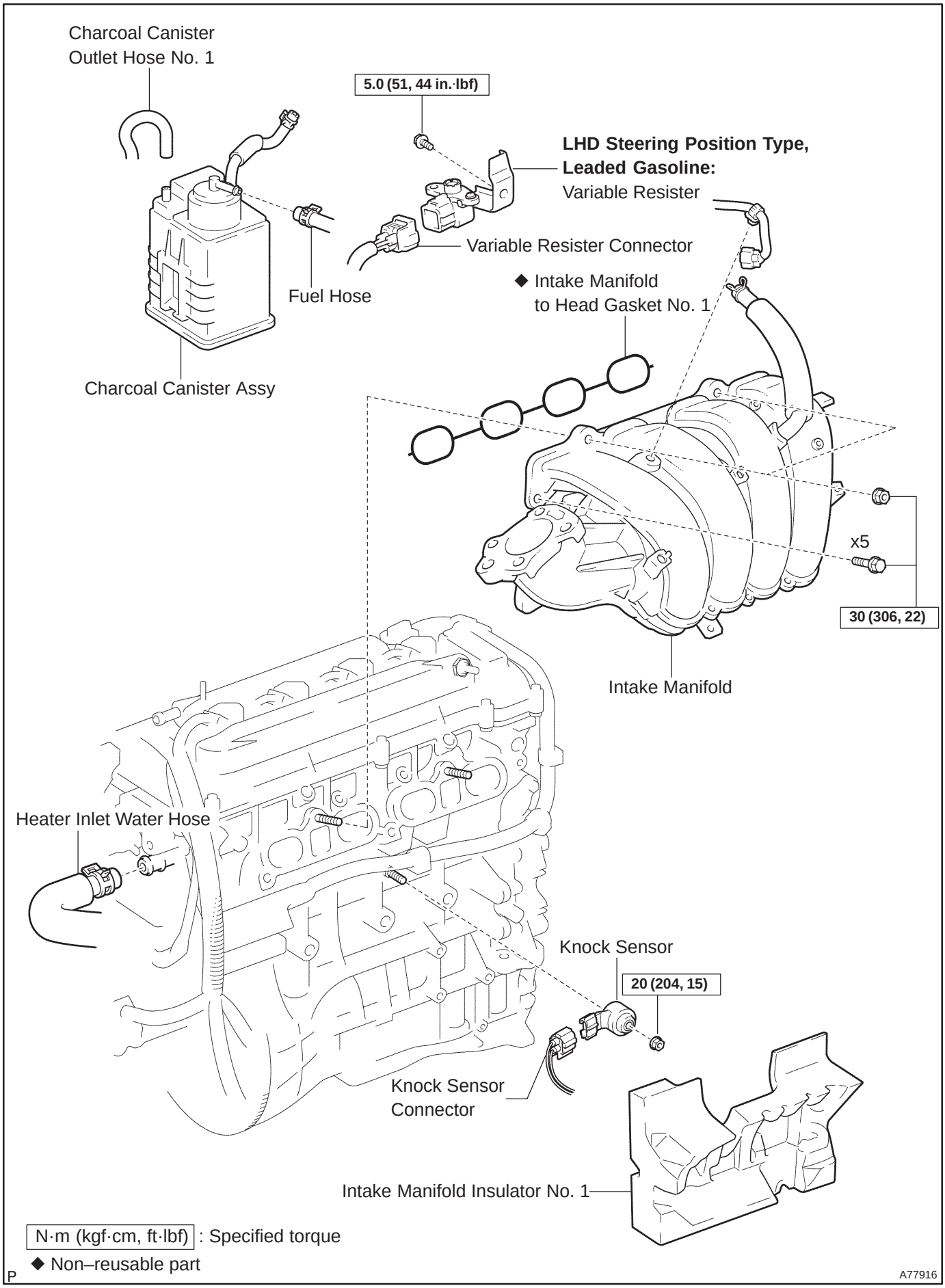

cardiagn.com

100FL–01

REPLACEMENT

1. **DISCHARGE FUEL SYSTEM PRESSURE (See page 11–15)**
2. **REMOVE ENGINE ROOM COVER SIDE (See page 10–26)**
3. **REMOVE RADIATOR SUPPORT OPENING COVER (See page 10–26)**
4. **ENGINE COOLANT (See page 16–19)**
5. **REMOVE ENGINE COVER SUB–ASSY NO.1 (See page 10–26)**
6. **REMOVE AIR CLEANER CAP SUB–ASSY (See page 10–26)**
7. **SEPARATE ACCELERATOR CONTROL CABLE ASSY (See page 10–26)**
8. **REMOVE THROTTLE BODY ASSY (See page 10–26)**
9. **DISCONNECT FUEL TUBE SUB–ASSY (See page 11–26)**
   SST 09268–21010
10. **REMOVE FUEL DELIVERY PIPE SUB–ASSY (See page 11–26)**

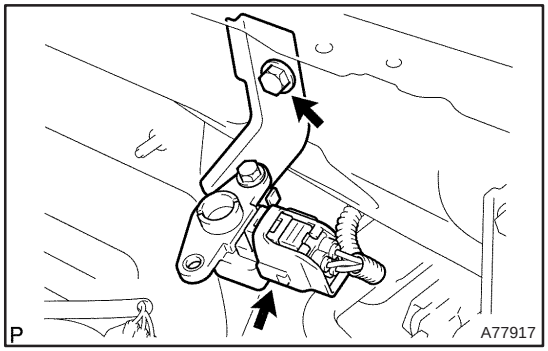

11. **REMOVE VARIABLE RESISTOR (LHD STEERING POSITION TYPE, LEADED GASOLINE)**
(a) Disconnect the variable resistor connector.
(b) Remove the bolt, and then remove the variable resistor.

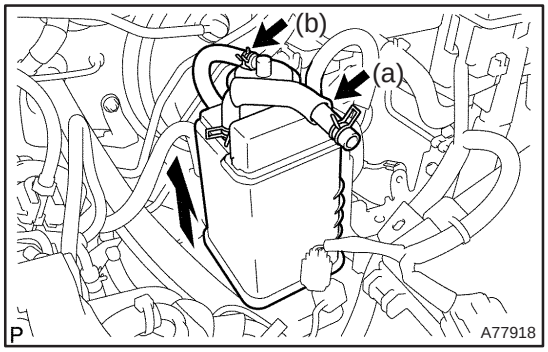

12. **REMOVE CHARCOAL CANISTER ASSY**
(a) Disconnect the charcoal canister outlet hose No. 1.
(b) Disconnect the fuel hose.
(c) Pull up and remove the charcoal canister.

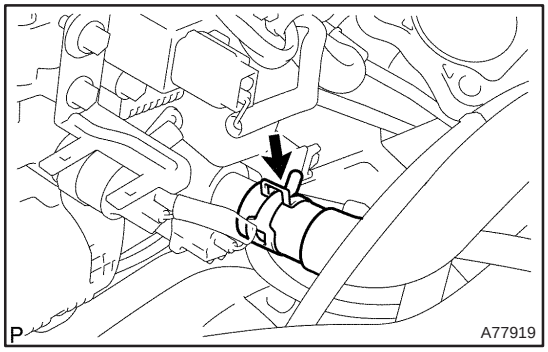

13. **DISCONNECT HEATER INLET WATER HOSE**

cardiagn.com

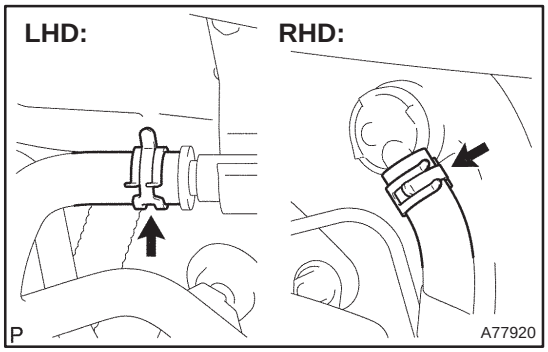

14. REMOVE INTAKE MANIFOLD

(a) Disconnect the union to connector tube hose.

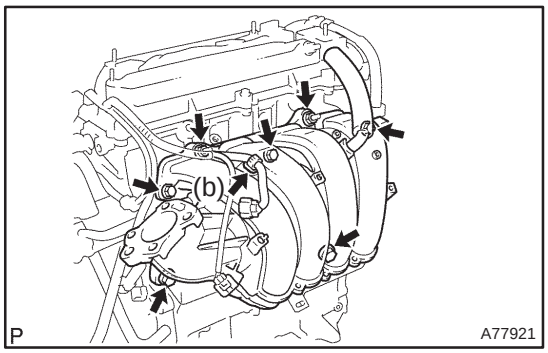

(b) Remove the wire harness clamp.

(c) Remove the 5 bolts and 2 nuts, and then remove the intake manifold.

(d) Remove the gasket from the intake manifold.

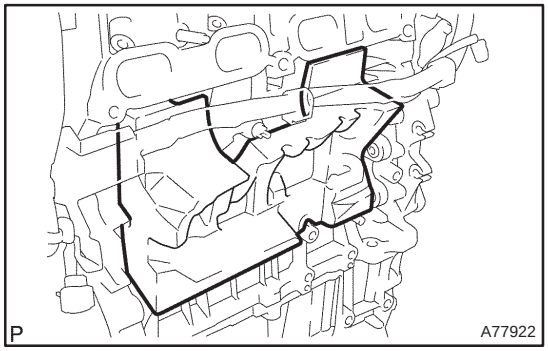

15. REMOVE INTAKE MANIFOLD INSULATOR NO.1

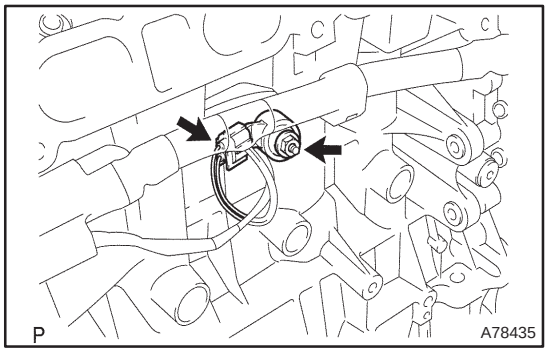

16. REMOVE KNOCK SENSOR

(a) Disconnect the knock sensor connector.

(b) Remove the nut, and then remove the knock sensor.

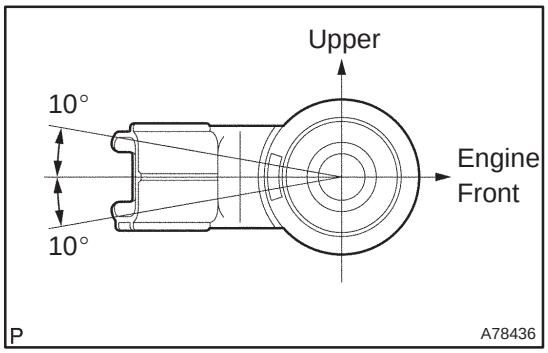

17. INSTALL KNOCK SENSOR

(a) Install the knock sensor with the nut as shown in the illustration.

Torque: 20 N·m (204 kgf·cm, 15 ft·lbf)

(b) Connect the knock sensor connector.

cardiagn.com

18. INSTALL INTAKE MANIFOLD INSULATOR NO.1

19. INSTALL INTAKE MANIFOLD

(a) Install a new gasket to the intake manifold.

(b) Install the intake manifold with the 5 bolts and 2 nuts.
Torque: 30 N·m (306 kgf·cm, 22 ft·lbf)

(c) Install the wire harness clamp.

(d) Connect the union to connector tube hose.

20. CONNECT HEATER INLET WATER HOSE

21. INSTALL CHARCOAL CANISTER ASSY

22. INSTALL VARIABLE RESISTOR (LHD STEERING POSITION TYPE, LEADED GASOLINE)
Torque: 5.0 N·m (51 kgf·cm, 44 in.·lbf)

23. INSTALL FUEL DELIVERY PIPE SUB–ASSY (See page 11–26)

24. CONNECT FUEL TUBE SUB–ASSY (See page 11–26)

25. INSTALL THROTTLE BODY ASSY (See page 10–26)

26. INSTALL ACCELERATOR CONTROL CABLE ASSY (See page 10–26)

27. INSTALL AIR CLEANER CAP SUB–ASSY

28. ADD ENGINE COOLANT (See page 16–19)

29. CHECK FOR ENGINE COOLANT LEAKS (See page 16–13)

30. CHECK FOR FUEL LEAKS (See page 11–19)

31. INSTALL ENGINE COVER SUB–ASSY NO.1 (See page 10–26)

32. INSTALL ENGINE ROOM COVER SIDE

33. INSTALL RADIATOR SUPPORT OPENING COVER

cardiagn.com

KNOCK SENSOR (1AZ–FSE)

COMPONENTS

100F9–01

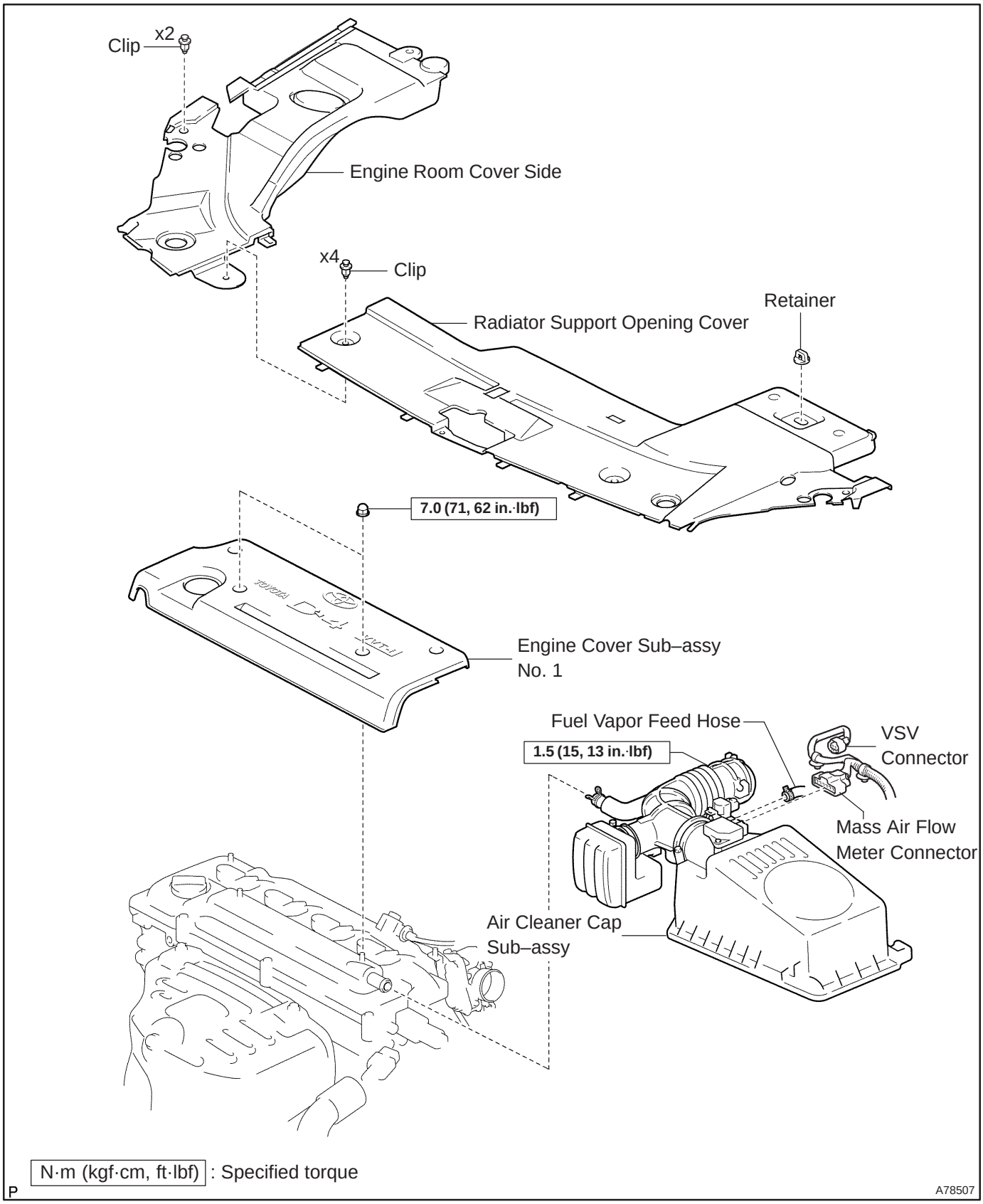

cardiagn.com

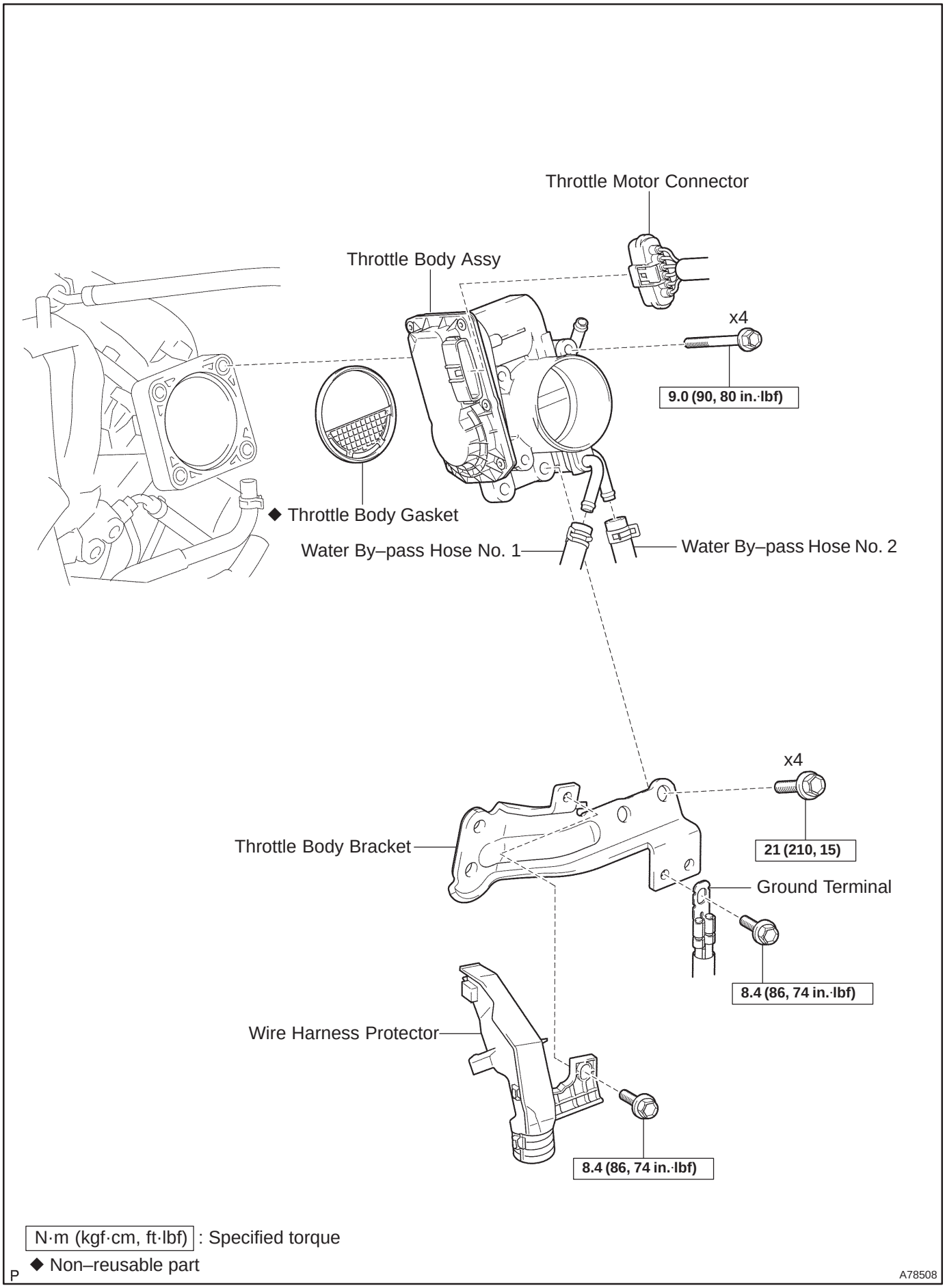

cardiagn.com

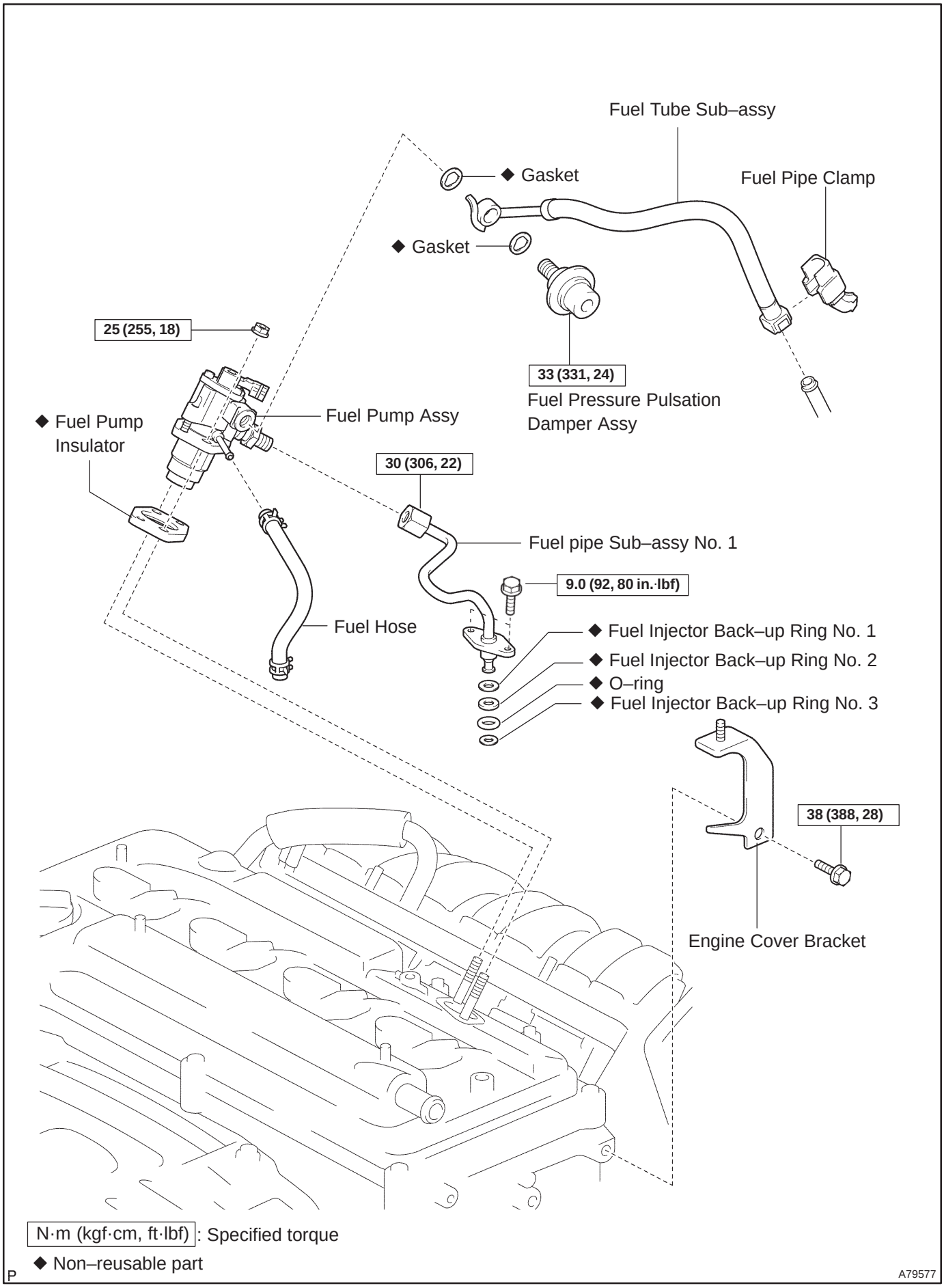

cardiagn.com

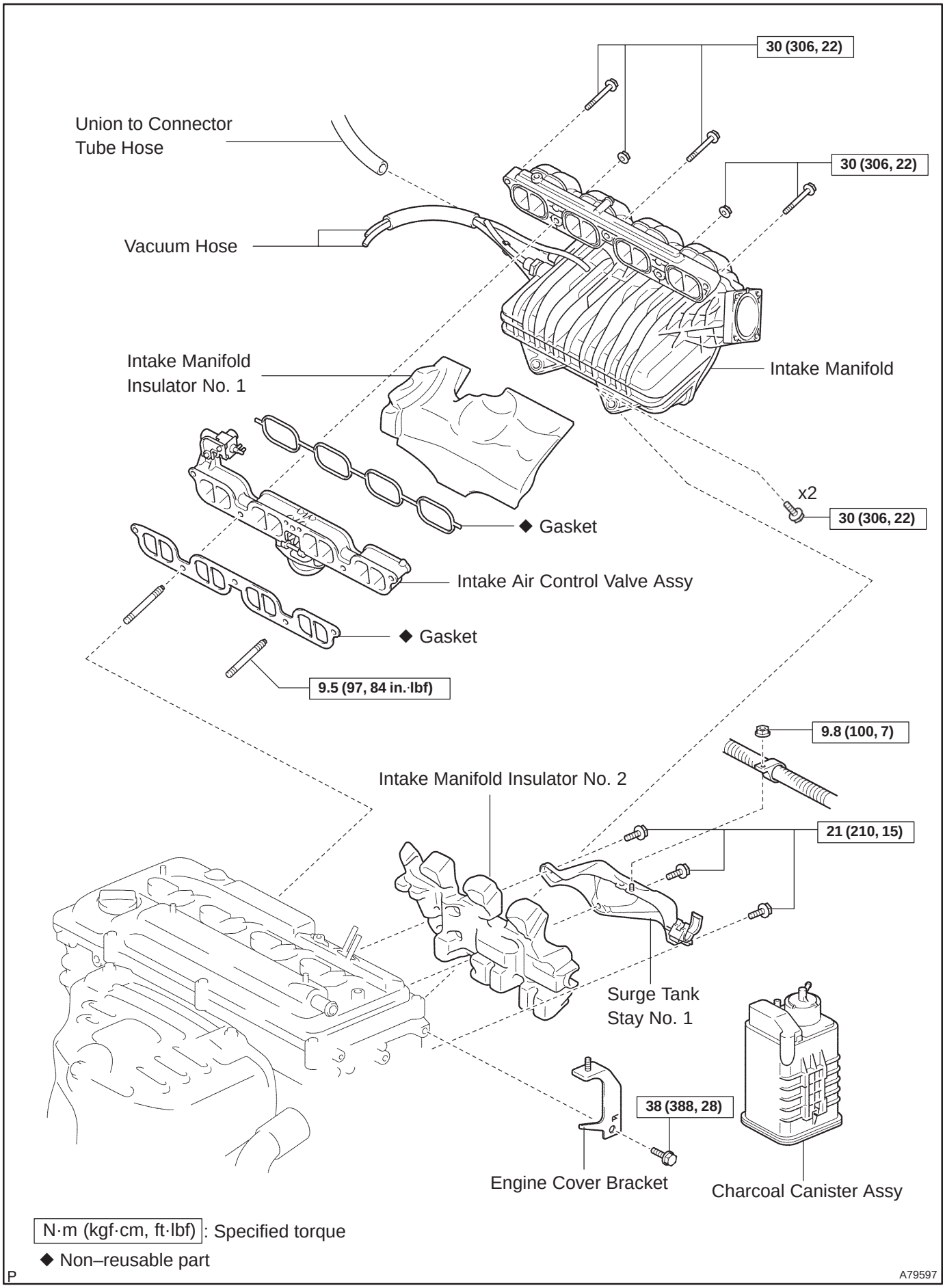

cardiagn.com

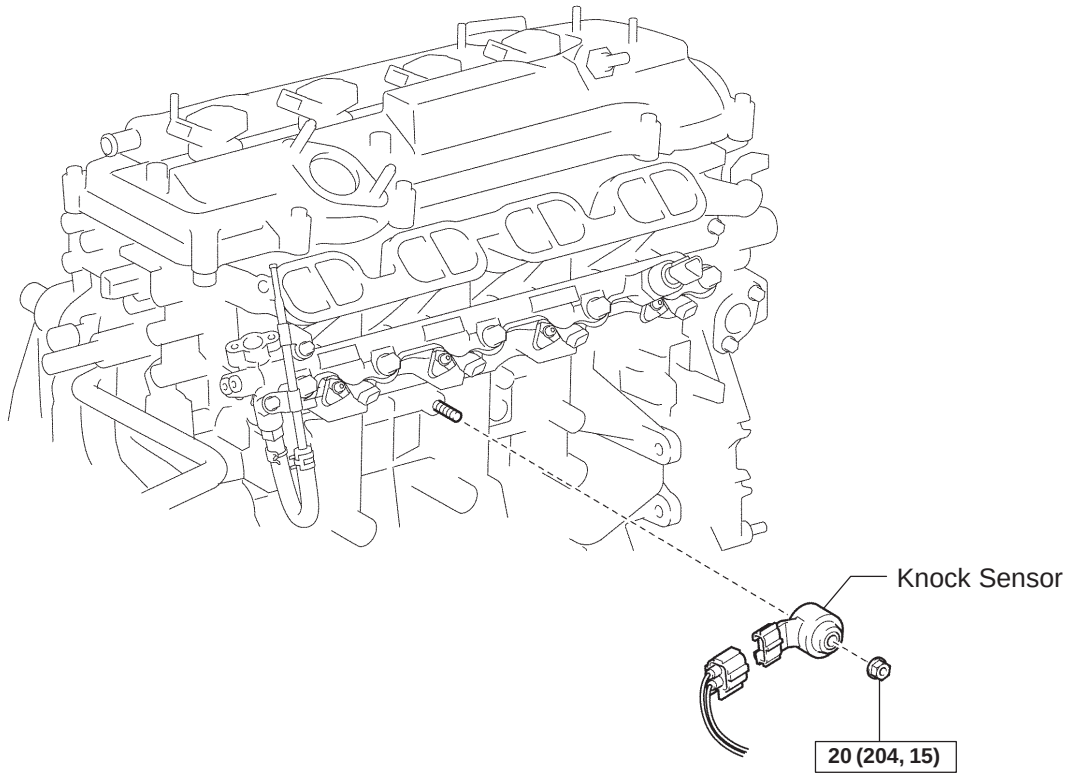

N·m (kgf·cm, ft·lbf): Specified torque

P

A79833

cardiagn.com

100FA–01

REPLACEMENT

1. **DISCHARGE FUEL SYSTEM PRESSURE (See page 11–30)**
2. **REMOVE RADIATOR SUPPORT OPENING COVER (See page 18–16)**
3. **REMOVE ENGINE ROOM COVER SIDE (See page 18–17)**
4. **REMOVE ENGINE COVER SUB–ASSY NO.1 (See page 10–44)**
5. **DRAIN ENGINE COOLANT (See page 16–31)**
6. **REMOVE AIR CLEANER CAP SUB–ASSY (See page 10–44)**
7. **REMOVE THROTTLE BODY ASSY (See page 10–44)**
8. **REMOVE CHARCOAL CANISTER ASSY**
9. **REMOVE ENGINE COVER BRACKET (See page 11–52)**
10. **REMOVE FUEL PUMP ASSY (See page 11–52)**
11. **REMOVE INTAKE MANIFOLD (See page 11–42)**
12. **REMOVE SURGE TANK STAY NO.1 (See page 11–42)**
13. **REMOVE INTAKE MANIFOLD INSULATOR NO.2 (See page 11–42)**

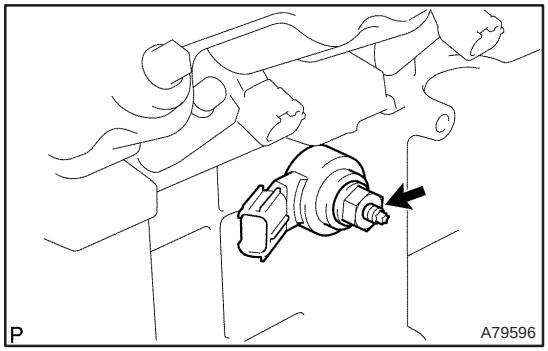

14. **REMOVE KNOCK SENSOR**

(a) Remove the nut and the knock sensor.

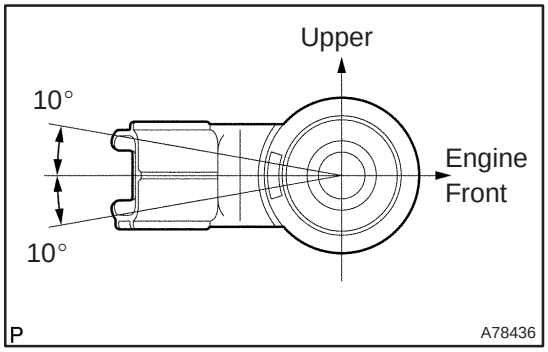

15. **INSTALL KNOCK SENSOR**

(a) Install the knock sensor with the nut as shown in the illustration.
Torque: 20 N·m (204 kgf·cm, 15 ft·lbf)

16. **INSTALL INTAKE MANIFOLD INSULATOR NO.2 (See page 11–42)**
17. **INSTALL SURGE TANK STAY NO.1 (See page 11–42)**
18. **INSTALL INTAKE MANIFOLD (See page 11–42)**
19. **INSTALL FUEL PUMP ASSY (See page 11–52)**
20. **INSTALL ENGINE COVER BRACKET**

(a) Install the engine cover bracket and the bolt.
Torque: 38 N·m (388 kgf·cm, 28 ft·lbf)

21. **INSTALL CHARCOAL CANISTER ASSY**
22. **INSTALL THROTTLE BODY ASSY (See page 10–44)**
23. **INSTALL AIR CLEANER CAP SUB–ASSY (See page 10–44)**
24. **ADD ENGINE COOLANT (See page 16–31)**
25. **CHECK FOR ENGINE COOLANT LEAKS (See page 16–25)**
26. **CHECK FOR FUEL LEAKS**
27. **INSTALL ENGINE COVER SUB–ASSY NO.1**
Torque: 7.0 N·m (71 kgf·cm, 62 in.·lbf)

cardiagn.com

28. INSTALL ENGINE ROOM COVER SIDE

29. INSTALL RADIATOR SUPPORT OPENING COVER

cardiagn.com

KNOCK SENSOR (1ZZ–FE/3ZZ–FE)

REPLACEMENT

100FF–01

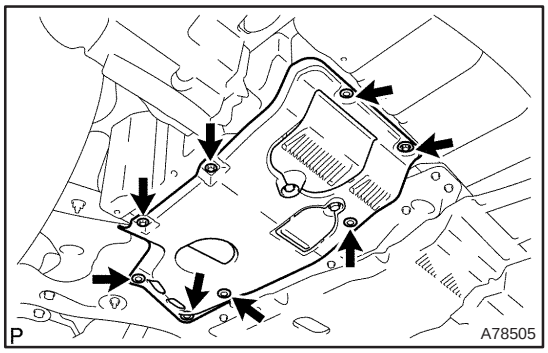

1. REMOVE ENGINE UNDER COVER SUB–ASSY NO.1

(a) Remove the 5 clips, 2 screws and bolt, and then remove the engine under cover.

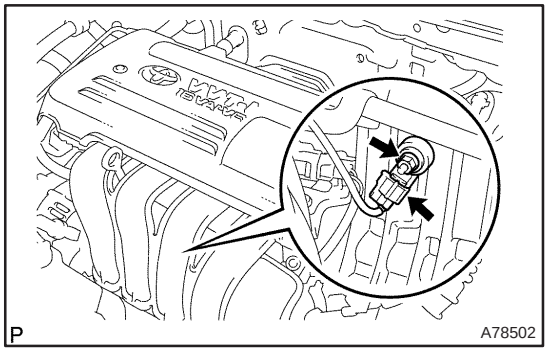

2. REMOVE KNOCK SENSOR

(a) Disconnect the knock sensor connector.

(b) Remove the nut, and then remove the knock sensor.

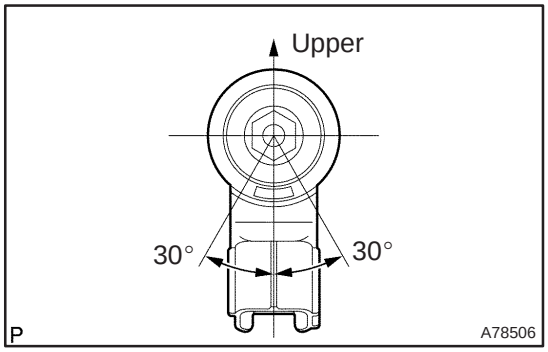

3. INSTALL KNOCK SENSOR

(a) Install the knock sensor with the nut as shown in the illustration.

Torque: 20 N·m (204 kgf·cm, 15 ft·lbf)

(b) Connect the knock sensor connector.

4. INSTALL ENGINE UNDER COVER SUB–ASSY NO.1

cardiagn.com

100G7–02

INSPECTION

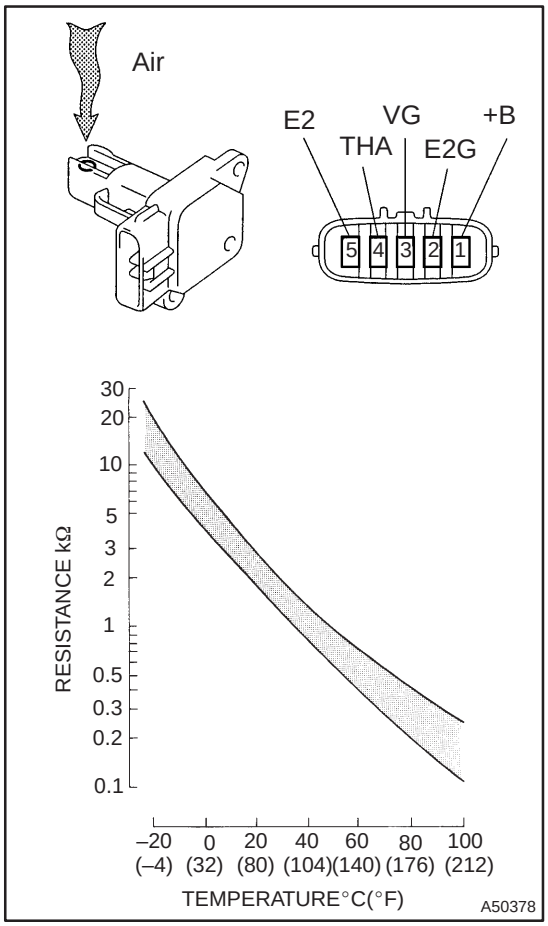

1. INSPECT MASS AIR FLOW METER

(a) Output voltage inspection.

(1) Apply battery voltage across terminals 1 (+B) and 2 (E2G).

(2) Using a voltmeter, connect the positive (+) tester probe to terminal 3 (VG), and negative (–) tester probe to terminal 2 (E2G).

(3) Blow air into the MAF meter, and check that the voltage fluctuates.

(b) Resistance inspection.

(1) Using an ohmmeter, measure the resistance between terminals 4 (THA) and 5 (E2).

Resistance:

Terminals	Resistance	Temperature
THA – E2	13.6 to 18.4 kΩ	–20 °C (–4 °F)
THA – E2	2.21 to 2.69 kΩ	20 °C (68 °F)
THA – E2	0.49 to 0.67 kΩ	60 °C (140 °F)

2. INSPECT CAMSHAFT TIMING OIL CONTROL VALVE ASSY

(a) Resistance inspection.

(1) Using an ohmmeter, measure the resistance between the terminals.

Resistance: 6.9 to 7.9 Ω at 20 °C (68 °F)

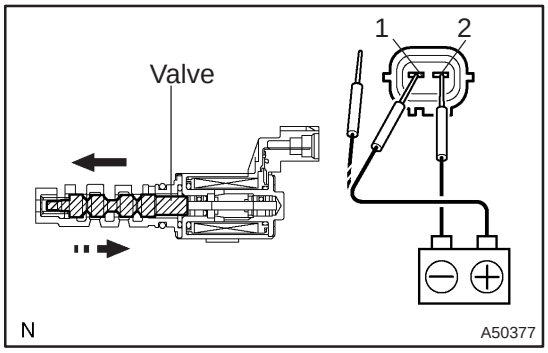

(b) Movement inspection.

(1) Connect the positive (+) lead from the battery to terminal 1 and negative (–) lead to terminal 2, and check the movement of the valve.

NOTICE:

Confirm the valve does not adhere.

HINT:

Bad returning of the valve by entrance of foreign objects causes subtle pressure leak to the advanced direction. Then, DTC can be detected.

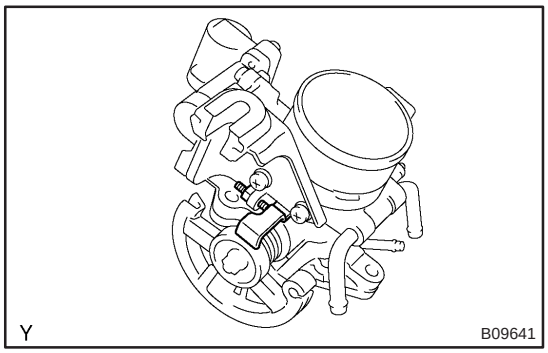

3. INSPECT THROTTLE BODY ASSY

(a) Check throttle body.

(1) Check that throttle valve shaft is not rickety.

(2) Check that each port is not stopped up.

(3) Check that throttle valve opens and closes smoothly.

(4) Check that there is no clearance between the throttle stop screw and throttle lever when the closed throttle position.

cardiagn.com

(b) Adjust the throttle stop screw.

NOTICE:

The throttle stop screw adjusting is very, so adjust it only when the adjusting is really needed.

(1) Loosen the locknut and loosen the screw until it detaches the lever.
(2) Confirm that the throttle vale is fully closed.
(3) After the screw touches the lever, tighten it by 1/4 revolution additionally and tighten the lock nut.
(4) Seal the lock nut with yellow paint.
(5) Check that the throttle position sensor operates normally.

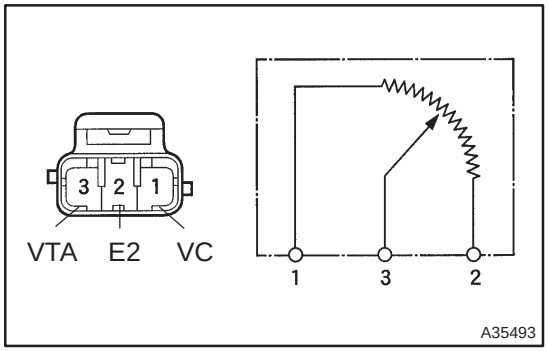

4. INSPECT THROTTLE POSITION SENSOR

(a) Resistance inspection.

(1) Disconnect the throttle position sensor connector.
(2) Using an ohmmeter, measure the resistance between terminals VC and E2.

Resistance: 2.5 to 5.0 kΩ

(3) Check the change of resistance between terminals VTA and E2.

Change of resistance:

The resistance value increases in proportion to the throttle lever opening value.

HINT:

Throttle valve	Resistance
Fully close	0.2 to 5.7 kΩ
Fully open	2.0 to 10.2 kΩ

cardiagn.com

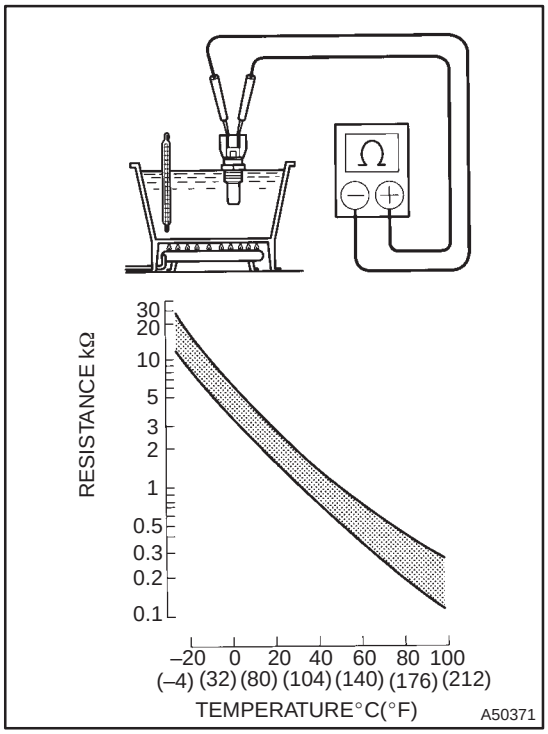

5. INSPECT ENGINE COOLANT TEMPERATURE SENSOR

(a) Resistance inspection.

(1) Using an ohmmeter, measure the resistance between each terminal.

Resistance:
Approx. 20°C (68°F) 2.32 to 2.59kΩ
Approx. 80°C (176°F) 0.310 to 0.326kΩ

NOTICE:

In case of checking the water temperature sensor in the water, be careful not to allow water to go into the terminals, and after checking, wipe out the sensor.

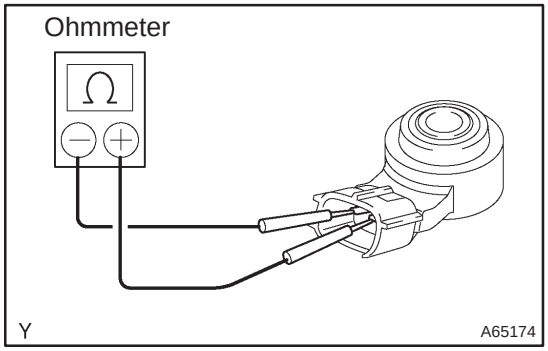

6. INSPECT KNOCK SENSOR

(a) Using an ohmmeter, measure the resistance between terminals.

Resistance: 120 to 280 kΩ at 20°C (68°F)

HINT:

If the resistance is not specified, replace the sensor.

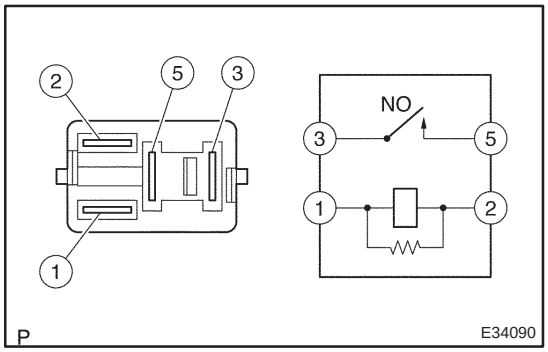

7. INSPECT EFI RELAY

(a) Inspect the relay continuity.

(1) Using an ohmmeter, check that there is continuity between terminals 1 and 2.

Specified condition: Continuity

(2) Check that there is no continuity between terminals 3 and 5.

Specified condition: No continuity

(b) Inspect the relay operation.

(1) Apply battery voltage across terminals 1 and 2.

(2) Using an ohmmeter, check that there is continuity between terminals 3 and 5.

Specified condition: Continuity

cardiagn.com

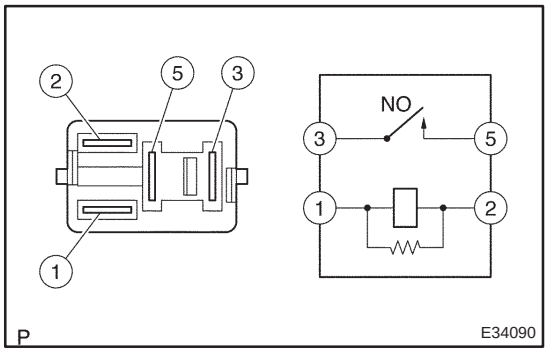

8. INSPECT CIRCUIT OPENING RELAY

(a) Inspect the relay continuity.

(1) Using an ohmmeter, check that there is continuity between terminals 1 and 2.

Specified condition: Continuity

(2) Check that there is no continuity between terminals 3 and 5.

Specified condition: No continuity

(b) Inspect the relay operation.

(1) Apply battery voltage across terminals 1 and 2.

(2) Using an ohmmeter, check that there is continuity between terminals 3 and 5.

Specified condition: Continuity

cardiagn.com

SFI SYSTEM (1AZ–FE)

ON–VEHICLE INSPECTION

100G6–02

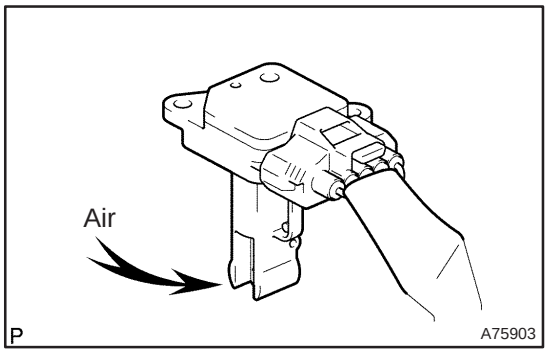

1. INSPECT MASS AIR FLOW METER

(a) If you have hand–held tester:
Inspect for operation
(1) Connect the hand–held tester to the DLC3.
(2) Turn the ignition switch ON.
(3) Blow air into the MAF meter, and check that the air flow fluctuates (MAF) of the ”DIAGNOSIS / OBD/ MOBD / DATA LIST / ALL” shown the standard value.

If operation is not as specified, check the MAF meter (See page 10–20), wiring and ECM.

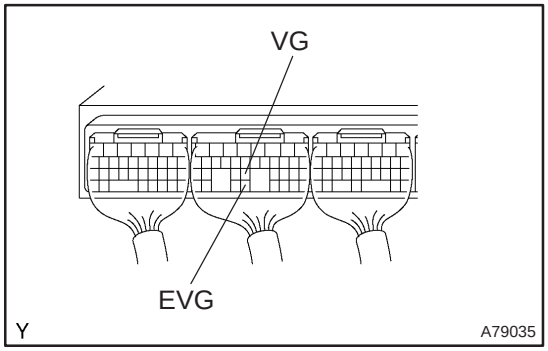

(b) If you have no hand–held tester:
Inspect for operation
(1) Turn the ignition switch ON.
(2) Connect the positive tester probe of the voltmeter to the terminal VG of the ECM. and the negative tester probe of the voltmeter to the terminal EVG of the ECM.
(3) Blow air into the MAF meter, and check that the voltage fluctuates.

If operation is not as specified, check the MAF meter (See page 10–20), wiring and ECM.

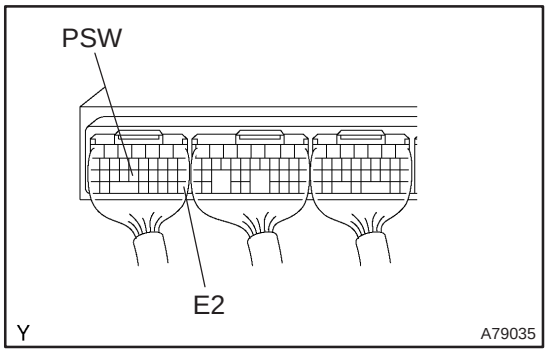

2. INSPECT POWER STEERING OIL PRESSURE SENSOR

(a) Using a voltmeter, measure the voltage between terminals PSW and E2.
Voltage:

Condition	Voltage (V)
Not spin the steering wheel at engine idling	9 to 14
Spin the steering wheel at engine idling	0 to 3

cardiagn.com

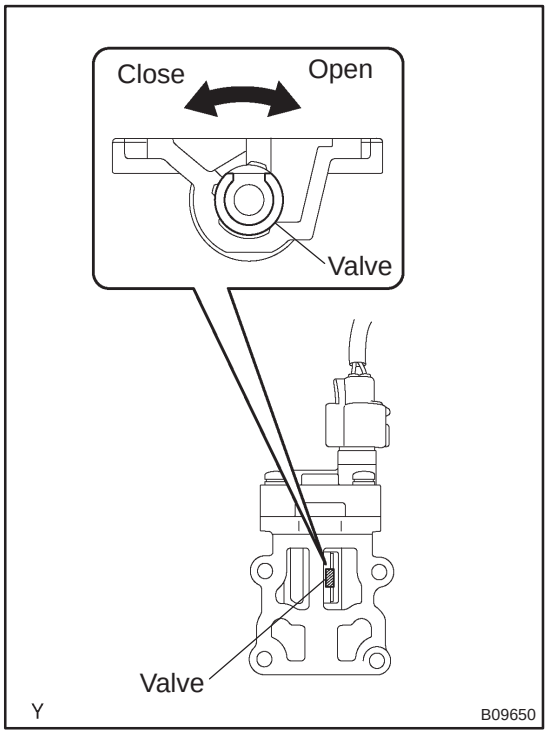

3. INSPECT IDLE AIR CONTROL VALVE

NOTICE:

- **It is impossible to check the resister value and the operation of ISCV by itself, because the ISCV has an IC circuit inside it, which transforms the duty signal from the ECM to the derive signal.**
- **After checking, erase the DTC.**
- **Clear the DTC after inspection.**

HINT:

When the ISCV system has malfunctions except for its adherence, DTC P0511 is detected.

(a) Operation inspection.

(1) Connect the ISC valve connector to the ISC valve.

(2) Check the ISC valve movement when the ignition switch is turned ON.

Movement:

Half open → fully close → fully open → half open

HINT:

ISC valve moves within 0.5 second.

cardiagn.com

INSPECTION

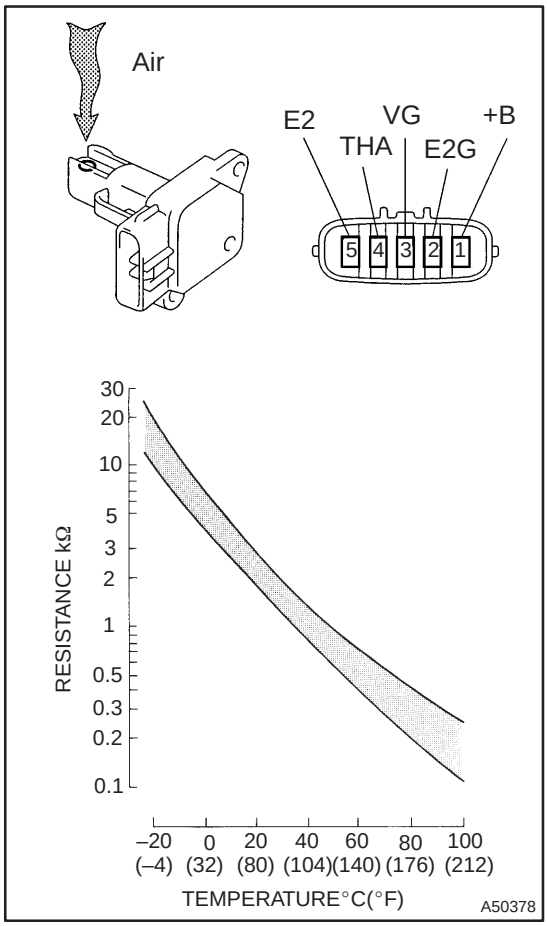

1. INSPECT MASS AIR FLOW METER

(a) Output voltage inspection.

(1) Apply battery voltage across terminals 1 (+B) and 2 (E2G).

(2) Using a voltmeter, connect the positive (+) tester probe to terminal 3 (VG), and negative (–) tester probe to terminal 2 (E2G).

(3) Blow air into the MAF meter, and check that the voltage fluctuates.

(b) Resistance inspection.

(1) Using an ohmmeter, measure the resistance between terminals 4 (THA) and 5 (E2).

Resistance:

Terminals	Resistance	Temperature
THA – E2	13.6 to 18.4 kΩ	–20 °C (–4 °F)
THA – E2	2.21 to 2.69 kΩ	20 °C (68 °F)
THA – E2	0.49 to 0.67 kΩ	60 °C (140 °F)

2. INSPECT CAMSHAFT TIMING OIL CONTROL VALVE ASSY

(a) Resistance inspection.

(1) Using an ohmmeter, measure the resistance between the terminals.

Resistance: 6.9 to 7.9 Ω at 20 °C (68 °F)

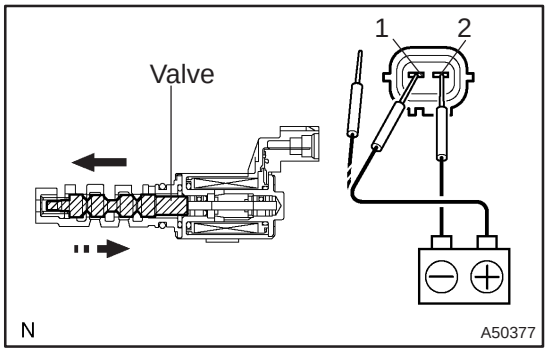

(b) Movement inspection.

(1) Connect the positive (+) lead from the battery to terminal 1 and negative (–) lead to terminal 2, and check the movement of the valve.

NOTICE:

Confirm the valve does not adhere.

HINT:

Bad returning of the valve by entrance of foreign objects causes subtle pressure leak to the advanced direction. Then, DTC can be detected.

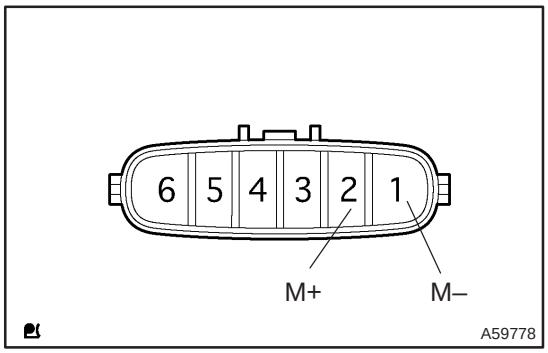

3. INSPECT THROTTLE BODY ASSY

(a) Using an ohmmeter, measure the resistance between the terminals.

Resistance:

Terminal No.	Resistance
2 (M+) – 1 (M–)	0.3 to 100 Ω at 20 °C (68 °F)

cardiagn.com

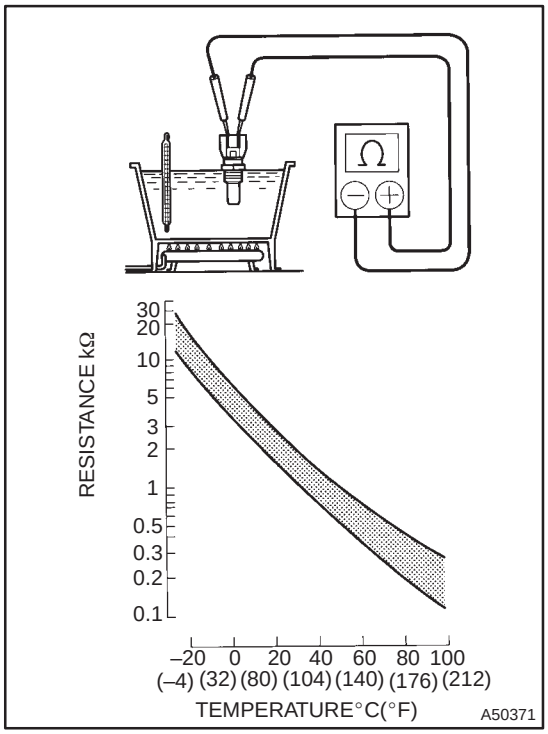

4. INSPECT ENGINE COOLANT TEMPERATURE SENSOR

(a) Resistance inspection.

(1) Using an ohmmeter, measure the resistance between each terminal.

Resistance:
Approx. 20°C (68°F) 2.32 to 2.59kΩ
Approx. 80°C (176°F) 0.310 to 0.326kΩ

NOTICE:
In case of checking the water temperature sensor in the water, be careful not to allow water to go into the terminals, and after checking, wipe out the sensor.

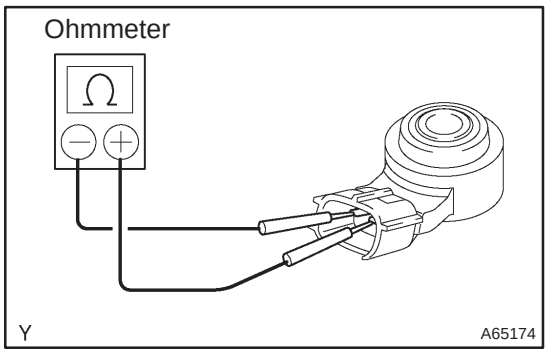

5. INSPECT KNOCK SENSOR

(a) Using an ohmmeter, measure the resistance between terminals.

Resistance: 120 to 280 kΩ at 20°C (68°F)

HINT:
If the resistance is not specified, replace the sensor.

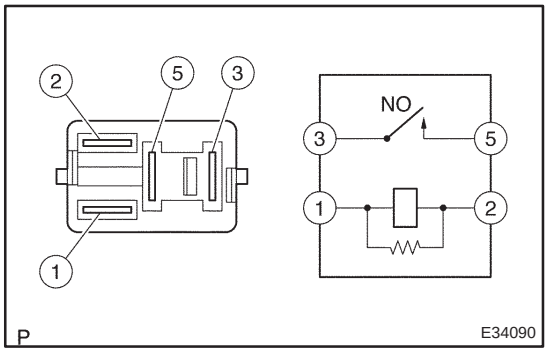

6. INSPECT EFI RELAY

(a) Inspect the relay continuity.

(1) Using an ohmmeter, check that there is continuity between terminals 1 and 2.

Specified condition: Continuity

(2) Check that there is no continuity between terminals 3 and 5.

Specified condition: No continuity

(b) Inspect the relay operation.

(1) Apply battery voltage across terminals 1 and 2.

(2) Using an ohmmeter, check that there is continuity between terminals 3 and 5.

Specified condition: Continuity

cardiagn.com

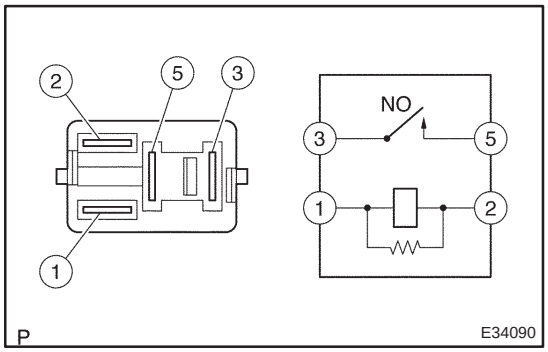

7. INSPECT CIRCUIT OPENING RELAY

(a) Inspect the relay continuity.

(1) Using an ohmmeter, check that there is continuity between terminals 1 and 2.

Specified condition: Continuity

(2) Check that there is no continuity between terminals 3 and 5.

Specified condition: No continuity

(b) Inspect the relay operation.

(1) Apply battery voltage across terminals 1 and 2.

(2) Using an ohmmeter, check that there is continuity between terminals 3 and 5.

Specified condition: Continuity

cardiagn.com

SFI SYSTEM (1AZ–FSE)

ON–VEHICLE INSPECTION

100G8–02

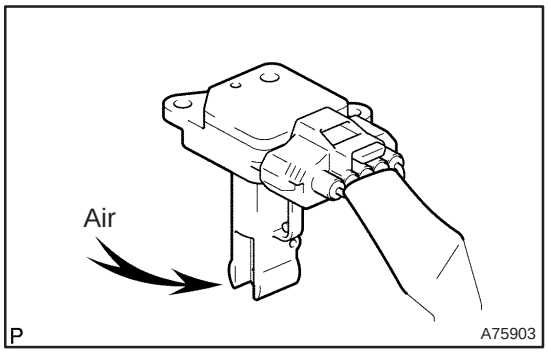

1. INSPECT MASS AIR FLOW METER

(a) If you have hand–held tester:
Inspect for operation
(1) Connect the hand–held tester to the DLC3.
(2) Turn the ignition switch ON.
(3) Blow air into the MAF meter, and check that the air flow fluctuates (MAF) of the CURRENT DATA shown the standard value.

If operation is not as specified, check the MAF meter (See page 10–39), wiring and ECM.

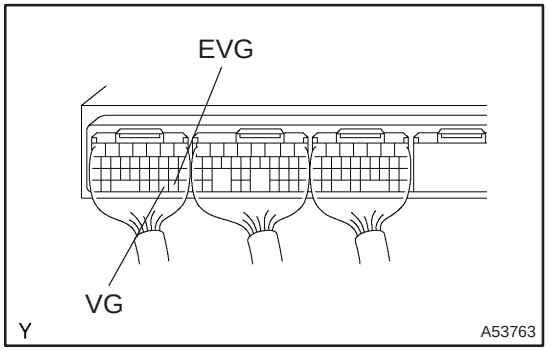

(b) If you have no hand–held tester:
Inspect for operation
(1) Turn the ignition switch ON.
(2) Connect the positive tester probe of the voltmeter to the terminal VG of the ECM. and the negative tester probe of the voltmeter to the terminal EVG of the ECM.
(3) Blow air into the MAF meter, and check that the voltage fluctuates.

If operation is not as specified, check the MAF meter (See page 10–39), wiring and ECM.

cardiagn.com

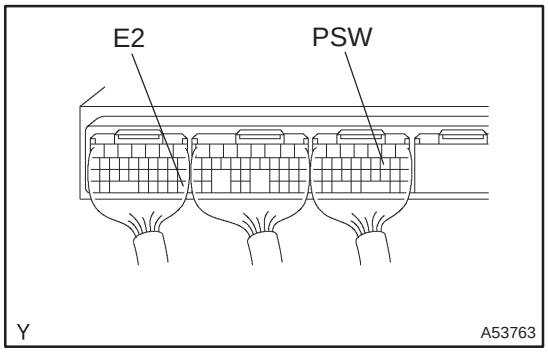

2. INSPECT POWER STEERING OIL PRESSURE SENSOR

(a) Using a voltmeter, measure the voltage between terminals PSW and E2.

Voltage:

Condition	Voltage (V)
Not spin the steering wheel at engine idling	9 to 14
Spin the steering wheel at engine idling	0 to 3

3. INSPECT THROTTLE BODY

(a) Inspect the throttle control motor for operating sound.
  (1) Turn the ignition switch ON.
  (2) When turning the accelerator pedal position sensor lever, check the running sound of the motor. Also, check that there is no friction sound.

If operation is not as specified, check the throttle control motor (See page 10–39), wiring and ECM.

(b) Inspect the throttle position sensor.
  (1) Connect the hand–held tester to the DLC3.
  (2) Turn the ignition switch ON.
  (3) When turning the accelerator pedal position sensor lever to the full–open position, check that the throttle valve opening percentage (THROTTLE POS) of the CURRENT DATA shown the standard value.

  Standard throttle valve opening percentage:
  60 % or more

If operation is not as specified, check that the accelerator pedal position sensor (See page 10–39), wiring and ECM.

If you have no hand–held tester, measure voltage between terminals (VTA1 – E2, VTA2 – E2) of the ECM connector (See page 05–318).

(c) Inspect the air assist system.
  (1) Start the engine and check that the CHK ENG does not light up.
  (2) Allow the engine to warm up to normal operating temperature.
  (3) Turn the A/C compressor ON to OFF, and check the idle speed.

  Idle speed (Transmission in neutral): 700 ± 50 rpm

NOTICE:

Perform inspection under condition without electrical load.

(d) After checking the above (b) to (d), perform the driving test and check that there is no sense of incongruity.

4. INSPECT ACCELERATOR PEDAL POSITION SENSOR

(a) Connect the hand–held tester to the DLC3.
(b) Turn the ignition switch ON.
(c) Check that the voltage (ACCEL POS) of the CURRENT DATA shown the standard value.
  Accelerator pedal released: 0.5 to 1.1 V
  Accelerator pedal depress: 2.6 to 4.5 V
(d) Check that the voltage (ACCEL POS #2) of the CURRENT DATA shown the standard value.
  Accelerator pedal released: 1.2 to 2.0 V
  Accelerator pedal depress: 3.4 to 5.3 V

If you have no hand–held tester, measure voltage between terminals (VPA – EPA, VPA2 – EPA2) of the ECM connector (See page 05–318).

cardiagn.com

100EY–02

INSPECTION

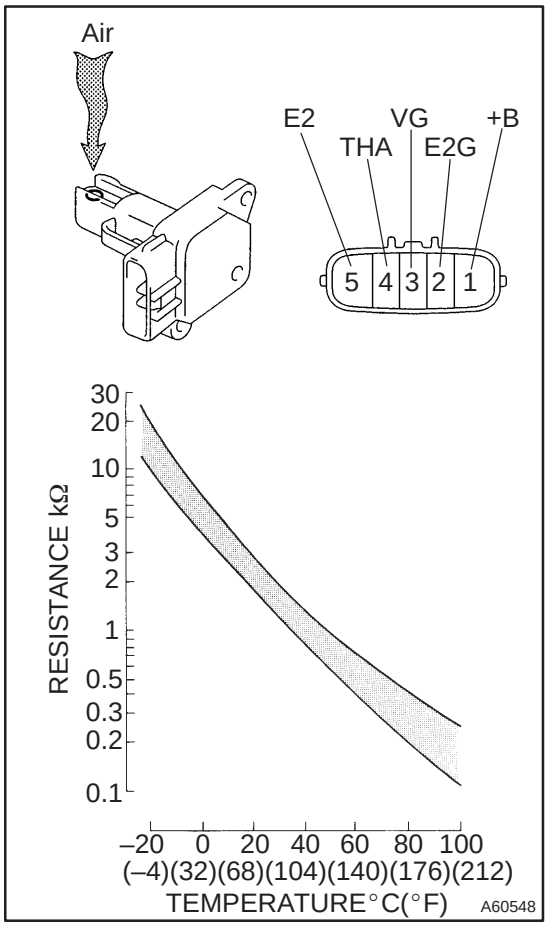

1. INSPECT MASS AIR FLOW METER

(a) Output voltage inspection.

(1) Apply battery voltage across terminals 1 (+B) and 2 (E2G).

(2) Connect the positive (+) tester probe to terminal 3 (VG), and negative (–) tester probe to terminal 2 (E2G).

(3) Blow air into the MAF meter, and check that the voltage output fluctuates.

(b) Resistance inspection.

(1) Using an ohmmeter, measure the resistance between terminals 4 (THA) and 5 (E2).

Resistance:

Terminals	Resistance	Temperature
THA – E2	13.6 to 18.4 kΩ	–20 °C (–4 °F)
THA – E2	2.21 to 2.69 kΩ	20 °C (68 °F)
THA – E2	0.49 to 0.67 kΩ	60 °C (140 °F)

2. INSPECT CAMSHAFT TIMING OIL CONTROL VALVE ASSY

(a) Resistance inspection.

(1) Using an ohmmeter, measure the resistance between terminals.

Resistance: 6.9 to 7.9 Ω at 20°C (68°F)

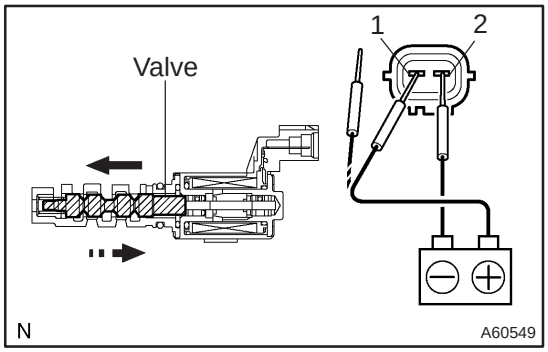

(b) Movement inspection.

(1) Connect the positive (+) lead from the battery to terminal 1 and negative (–) lead to terminal 2, and check the movement of the valve.

NOTICE:

Confirm the valve does not adhere.

HINT:

Bad returning of the valve by catching of foreign objects causes subtle pressure leak to the advanced direction. DTC can be detected.

cardiagn.com

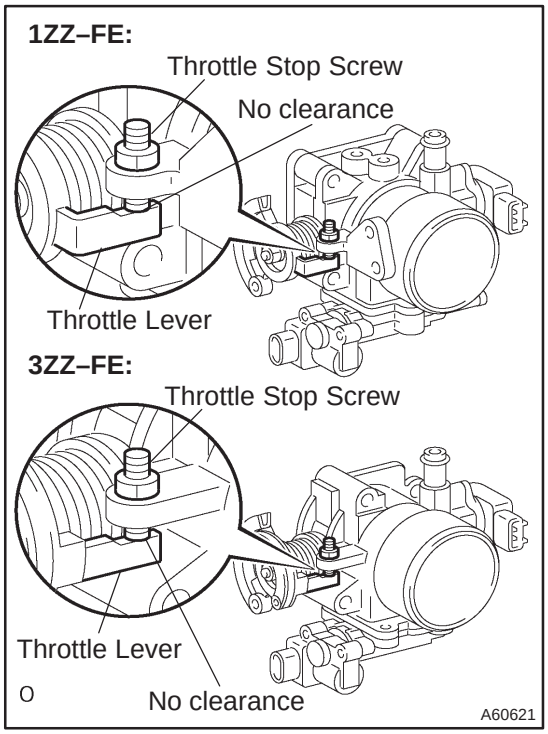

3. INSPECT THROTTLE BODY ASSY

(a) Check throttle body.

(1) Check that throttle valve shaft is not rickety.

(2) Check that each port is not stopped up.

(3) Check that throttle valve opens and closes smoothly.

(4) Check that there is no clearance between the throttle stop screw and throttle lever at the throttle closed position.

NOTICE:

Do not adjust the throttle stop screw.

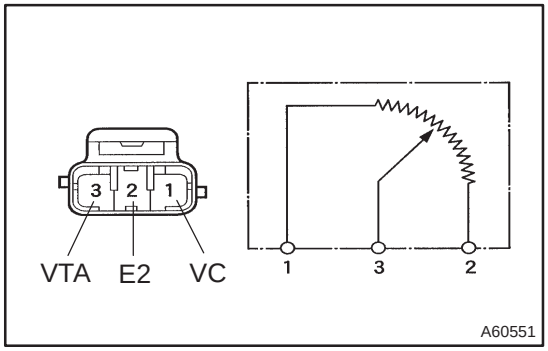

4. INSPECT THROTTLE POSITION SENSOR

(a) Resistance inspection.

(1) Disconnect the throttle position sensor connector.

(2) Using an ohmmeter, measure the resistance between terminals 1 (VC) and 2 (E2).

Resistance: 2.5 to 6.0 kΩ

(3) Check the variation resistance between terminals 3 (VTA) and 2 (E2).

Variation in resistance:

The resistance value increases in proportion to the throttle lever opening value.

HINT:

Throttle valve	Resistance
Fully open	0.2 to 5.7 kΩ
Fully close	2.0 to 10.2 kΩ

cardiagn.com

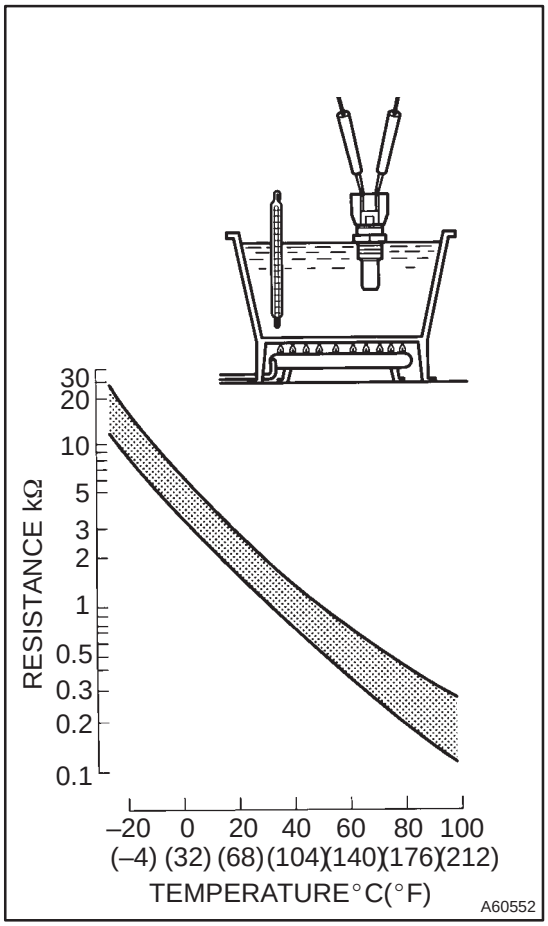

5. INSPECT ENGINE COOLANT TEMPERATURE SENSOR

(a) Resistance inspection.

(1) Using an ohmmeter, measure the resistance between terminals.

Resistance:
2.32 to 2.59 kΩ at 20°C (68°F)
0.310 to 0.326 kΩ at 80°C (176°F)

NOTICE:

In case of checking the water temperature sensor in the water, be careful not to allow water to go into the terminals, and after checking, wipe out the sensor.

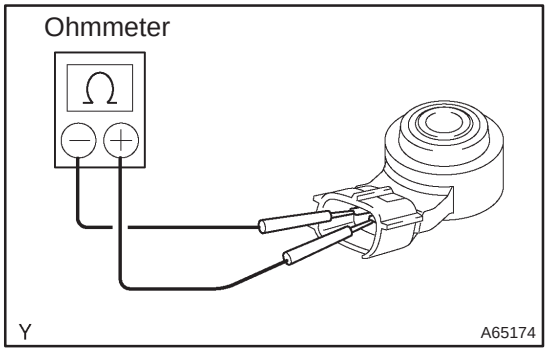

6. INSPECT KNOCK SENSOR

(a) Using an ohmmeter, measure the resistance between terminals.

Resistance: 120 to 280 kΩ at 20°C (68°F)

HINT:

If the resistance is not specified, replace the sensor.

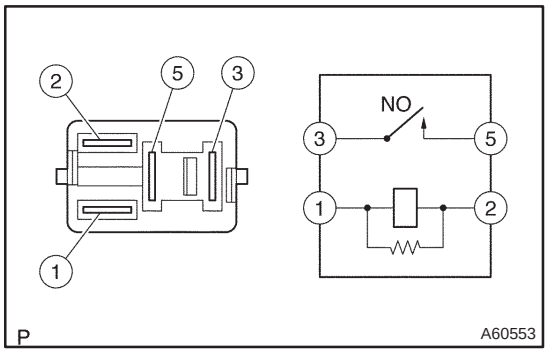

7. INSPECT EFI RELAY

(a) Inspect the relay continuity.

(1) Using an ohmmeter, check that there is continuity between terminals 1 and 2.

Specified condition: Continuity

(2) Check that there is no continuity between terminals 3 and 5.

Specified condition: No continuity

(b) Inspect the relay operation.

(1) Apply battery voltage across terminals 1 and 2.

(2) Using an ohmmeter, check that there is continuity between terminals 3 and 5.

Specified condition: Continuity

cardiagn.com

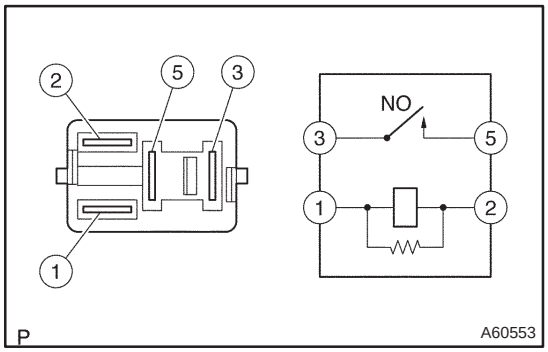

8. INSPECT CIRCUIT OPENING RELAY

(a) Inspect the relay continuity.

(1) Using an ohmmeter, check that there is continuity between terminals 1 and 2.

Specified condition: Continuity

(2) Check that there is no continuity between terminals 3 and 5.

Specified condition: No continuity

(b) Inspect the relay operation.

(1) Apply battery voltage across terminals 1 and 2.

(2) Using an ohmmeter, check that there is continuity between terminals 3 and 5.

Specified condition: Continuity

cardiagn.com

SFI SYSTEM (1ZZ–FE/3ZZ–FE)

ON–VEHICLE INSPECTION

100EX–02

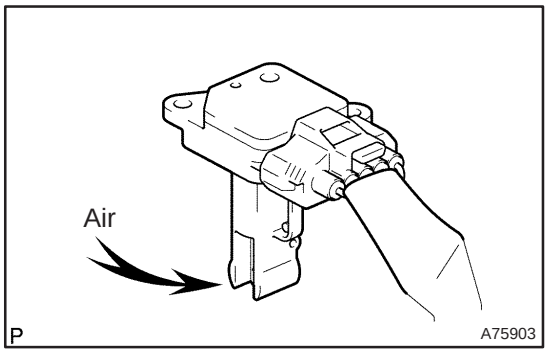

1. INSPECT MASS AIR FLOW METER

(a) If you have hand–held tester:
Inspect for operation
(1) Connect the hand–held tester to the DLC3.
(2) Turn the ignition switch ON.
(3) Blow air into the MAF meter, and check that the air flow fluctuates (MAF) of the ”DIAGNOSIS / OBD/ MOBD / DATA LIST / ALL” shown the standard value.

If operation is not as specified, check the MAF meter (See page 10–3), wiring and ECM.

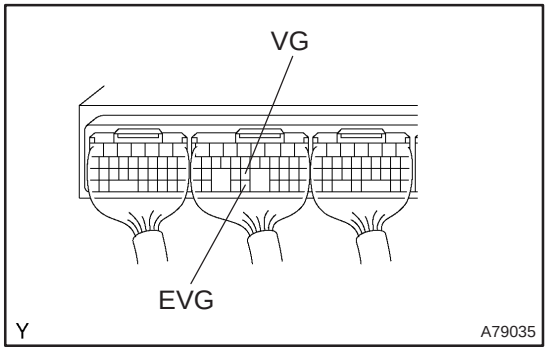

(b) If you have no hand–held tester:
Inspect for operation
(1) Turn the ignition switch ON.
(2) Connect the positive tester probe of the voltmeter to the terminal VG of the ECM. and the negative tester probe of the voltmeter to the terminal EVG of the ECM.
(3) Blow air into the MAF meter, and check that the voltage fluctuates.

If operation is not as specified, check the MAF meter (See page 10–3), wiring and ECM.

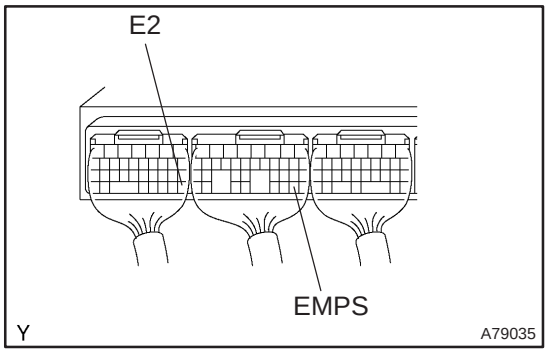

2. INSPECT POWER STEERING OIL PRESSURE SWITCH

(a) Using a voltmeter, measure the voltage between terminals EMPS and E2.
Voltage:

Condition	Voltage (V)
Not spin the steering wheel at engine idling	8 to 14
Spin the steering wheel at engine idling	0 to 1.5

cardiagn.com

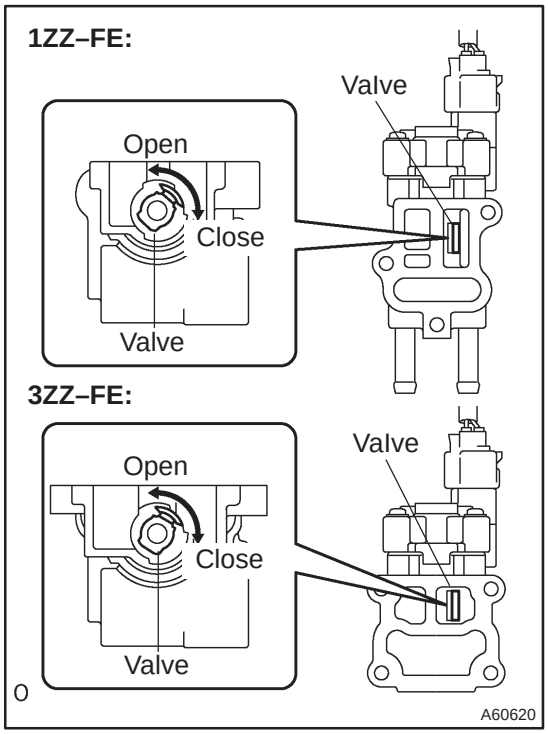

3. INSPECT IDLE AIR CONTROL VALVE

NOTICE:

- **It is impossible to check the resister value and the operation of ISCV by itself, because the ISCV has an IC circuit inside it, which transforms the duty signal from the ECM to the derive signal.**
- **Clear the DTC after inspection.**

HINT:

When the ISCV system has malfunctions except for its adherence, DTC P0505 is detected.

(a) Operation inspection.

(1) Connect the ISCV connector to the ISCV.

(2) Check the valve movement when the ignition switch is turned ON.

Movement:

Half open → fully close → fully open → half open

HINT:

ISCV moves within 0.5 second.

cardiagn.com

THROTTLE BODY ASSY (1AZ–FE)

COMPONENTS

100FG–01

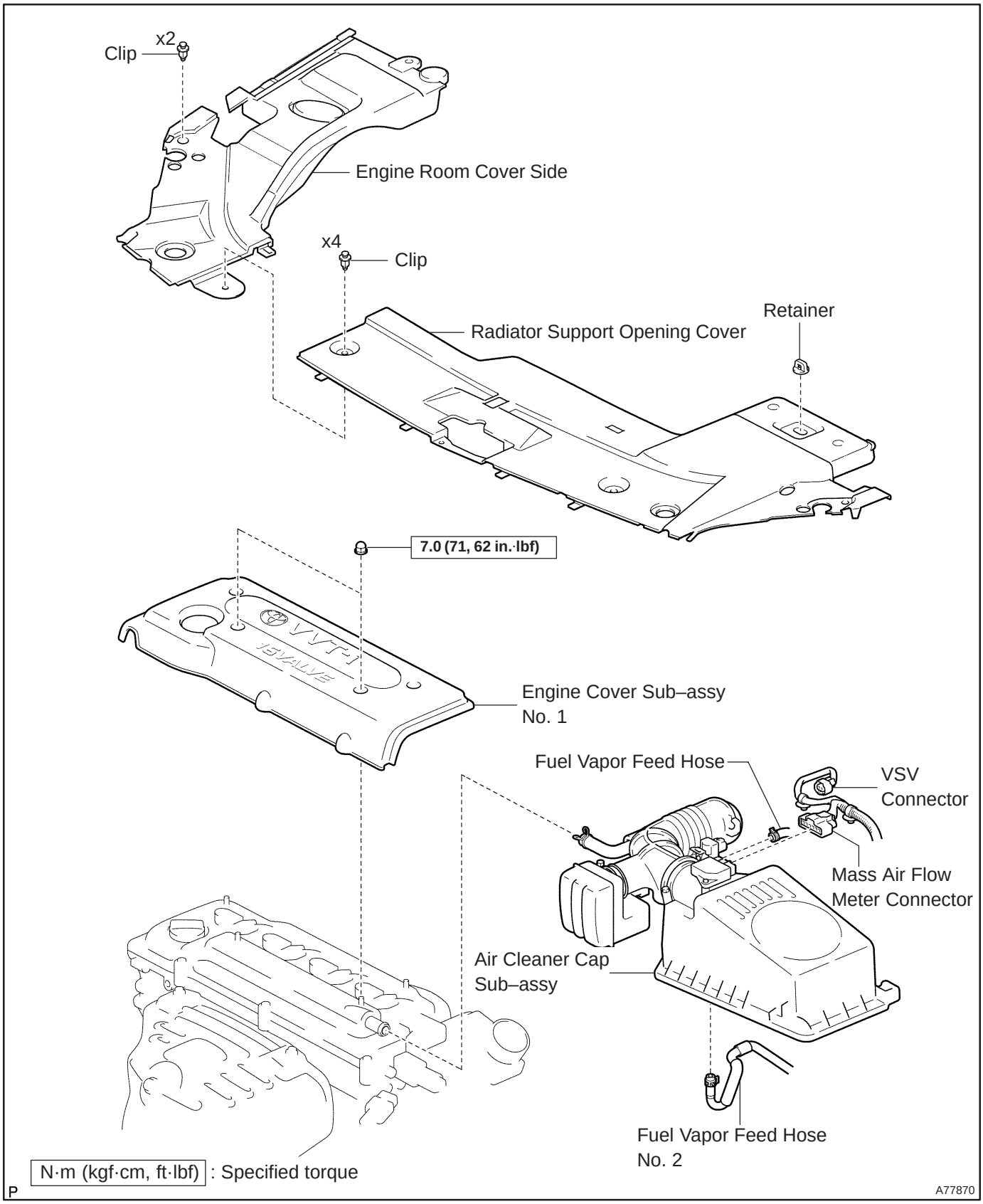

cardiagn.com

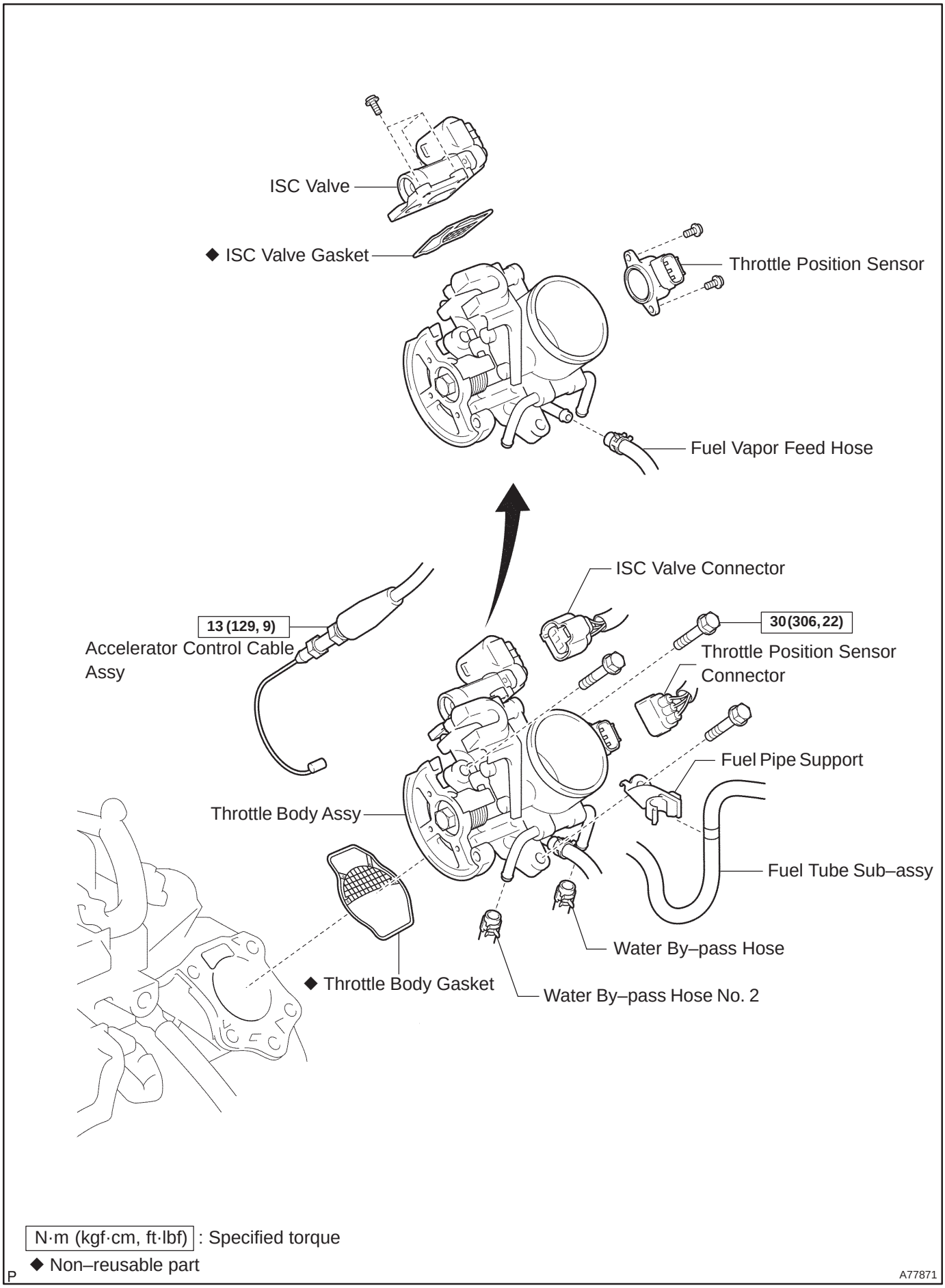

cardiagn.com

100FH–01

Removal & Installation and Disassembly & Reassembly

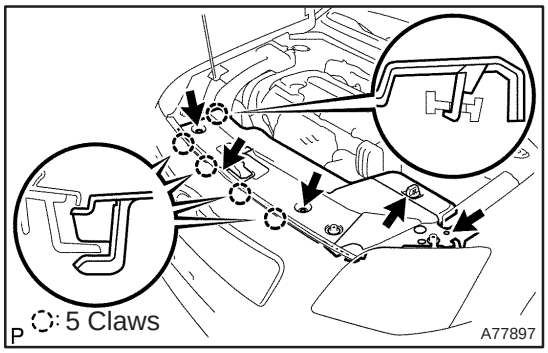

1. REMOVE ENGINE ROOM COVER SIDE

(a) Remove the retainer and 4 clips.

(b) Unfasten the 5 claws and remove the radiator support opening cover.

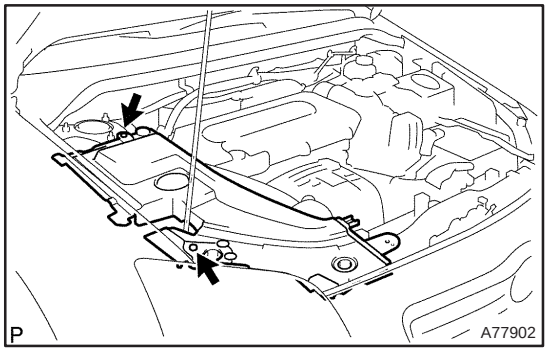

2. REMOVE RADIATOR SUPPORT OPENING COVER

(a) Remove the 2 clips, and then remove the engine room cover side.

3. DRAIN ENGINE COOLANT (See page 16–19)

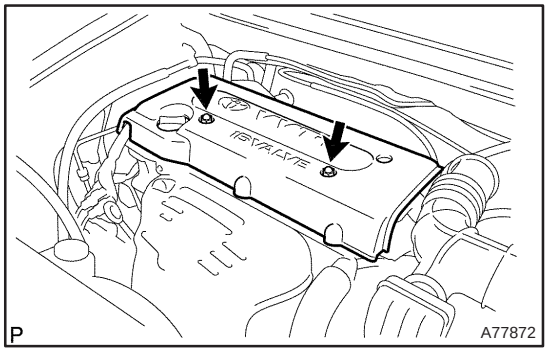

4. REMOVE ENGINE COVER SUB–ASSY NO.1

(a) Remove the 2 nuts, and then remove the engine cover No. 1.

cardiagn.com

5. REMOVE AIR CLEANER CAP SUB–ASSY

(a) Disconnect the mass air flow meter connector.
(b) Disconnect the VSV connector.
(c) Remove the 2 wire harness clamps.
(d) Disconnect the ventilation hose.
(e) Disconnect the fuel vapor feed hose No. 1.
(f) Disconnect the fuel vapor feed hose N0. 2.
(g) Remove the fuel vapor feed hose No. 2 from 2 clamps of the air cleaner hose.
(h) Lock the hose clamp as shown in the illustration.
(i) Raise the air cleaner clamp up, slide it to the air cleaner cap.
(j) Remove the air cleaner cap together with air cleaner hose No. 1.

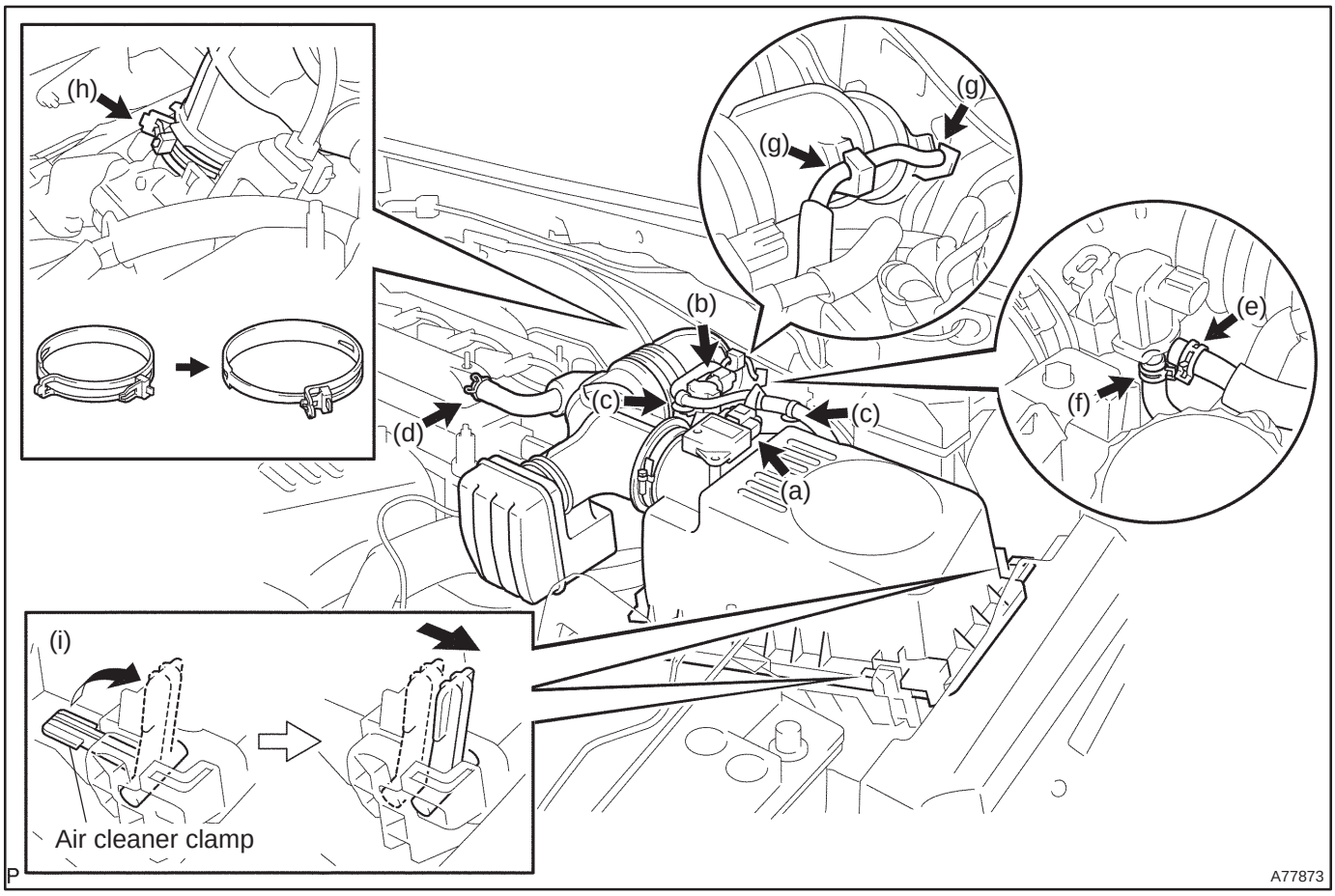

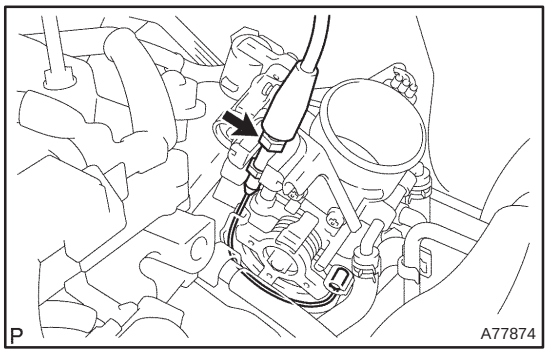

6. SEPARATE ACCELERATOR CONTROL CABLE ASSY

(a) Loosen the nut and separate the accelerator control cable.

cardiagn.com

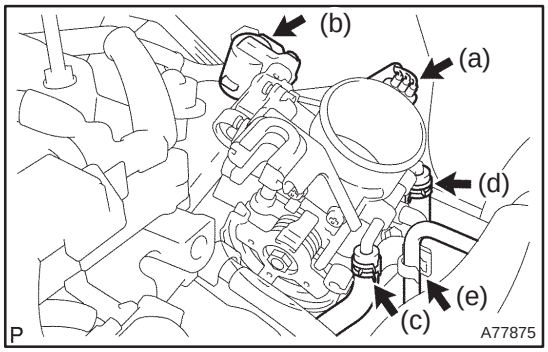

7. REMOVE THROTTLE BODY ASSY

(a) Disconnect the throttle position sensor connector.
(b) Disconnect the ISC valve connector.
(c) Disconnect the water by–pass hose No. 2.
(d) Disconnect the water by–pass hose.
(e) Remove the fuel tube from the fuel pipe support.

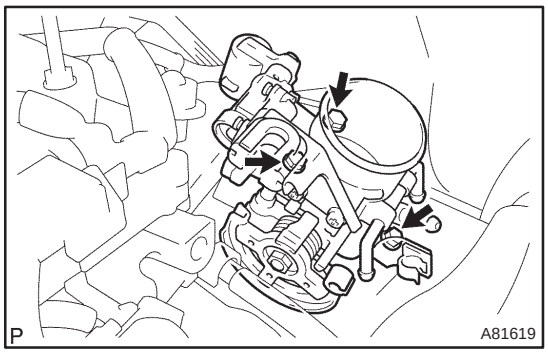

(f) Remove the 3 bolts, and then remove the fuel pipe support and the throttle body.
(g) Remove the gasket from the intake manifold.

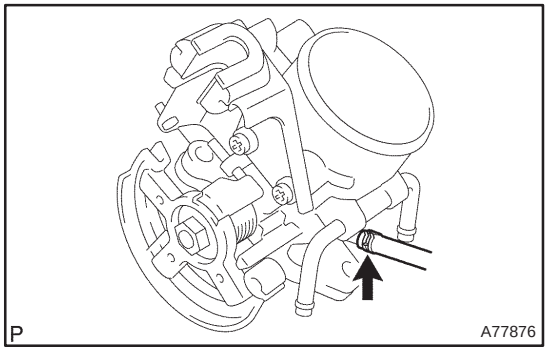

8. REMOVE FUEL VAPOR FEED HOSE NO.2

(a) Remove the fuel vapor feed hose No. 2 from the throttle body.

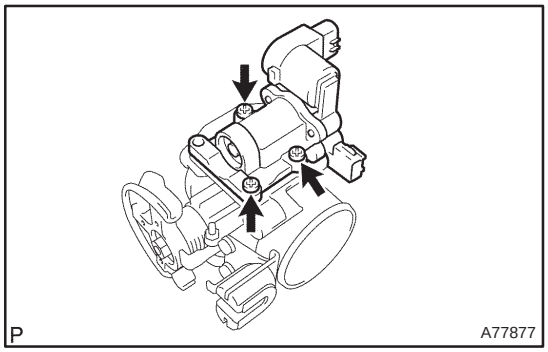

9. REMOVE ISC VALVE

(a) Remove the 3 screws, and then remove the ISC valve.
(b) Remove the gasket from the throttle body.

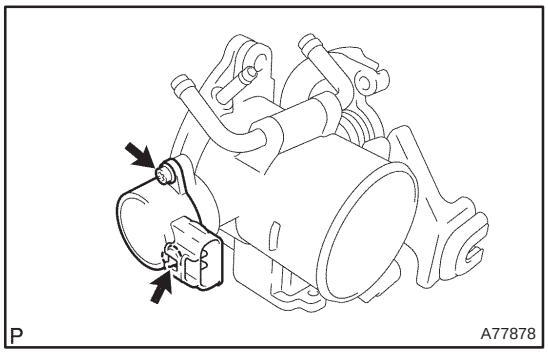

10. REMOVE THROTTLE POSITION SENSOR

(a) Remove the 2 screws, and then remove the throttle position sensor.

cardiagn.com

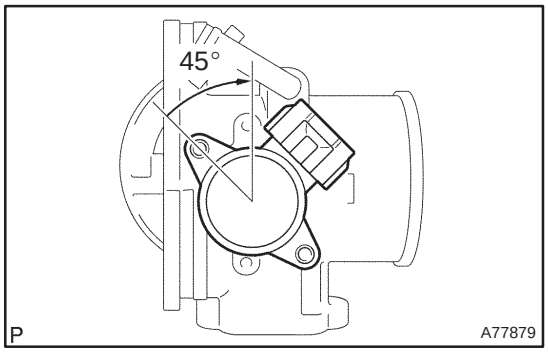

11. INSTALL THROTTLE POSITION SENSOR

(a) Make sure that throttle valve is fully closed.

(b) With the throttle position sensor rotated 45° counter-clockwise about the fully closed position of the throttle valve, install the throttle position sensor to the throttle body.

(c) Rotate the throttle position sensor clockwise and secure it with the 2 screws.

12. INSTALL ISC VALVE

(a) Install a new gasket to the throttle body.

(b) Install the ISC valve with the 3 screws.

13. INSTALL FUEL VAPOR FEED HOSE NO.2

14. INSTALL THROTTLE BODY ASSY

(a) Install a new gasket to the intake manifold.

(b) Install the throttle body and the fuel pipe support with the 3 bolts.

Torque: 30 N·m (306 kgf·cm, 22 ft·lbf)

(c) Install the fuel tube to the fuel pipe support.

(d) Connect the water by–pass hose.

(e) Connect the water by–pass hose No. 2.

(f) Connect the ISC valve connector.

(g) Connect the throttle position sensor connector.

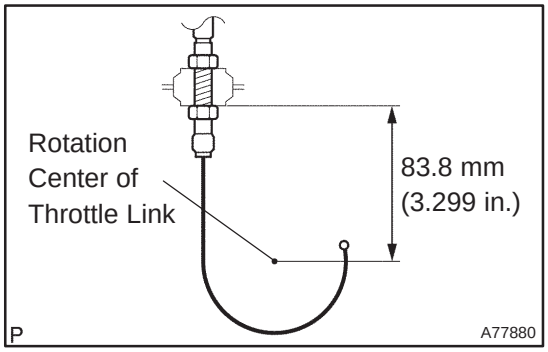

15. INSTALL ACCELERATOR CONTROL CABLE ASSY

(a) Instal the accelerator control cable as shown in the illustration.

Torque: 13 N·m (129 kgf·cm, 9 ft·lbf)

16. INSTALL AIR CLEANER CAP SUB–ASSY

17. INSTALL ENGINE COVER SUB–ASSY NO.1

Torque: 7.0 N·m (71 kgf·cm, 62 in.·lbf)

18. ADD ENGINE COOLANT (See page 16–19)

19. CHECK FOR ENGINE COOLANT LEAKS (See page 16–13)

20. INSTALL ENGINE ROOM COVER SIDE

21. INSTALL RADIATOR SUPPORT OPENING COVER

cardiagn.com

THROTTLE BODY ASSY (1AZ–FSE)

COMPONENTS

100FI–01

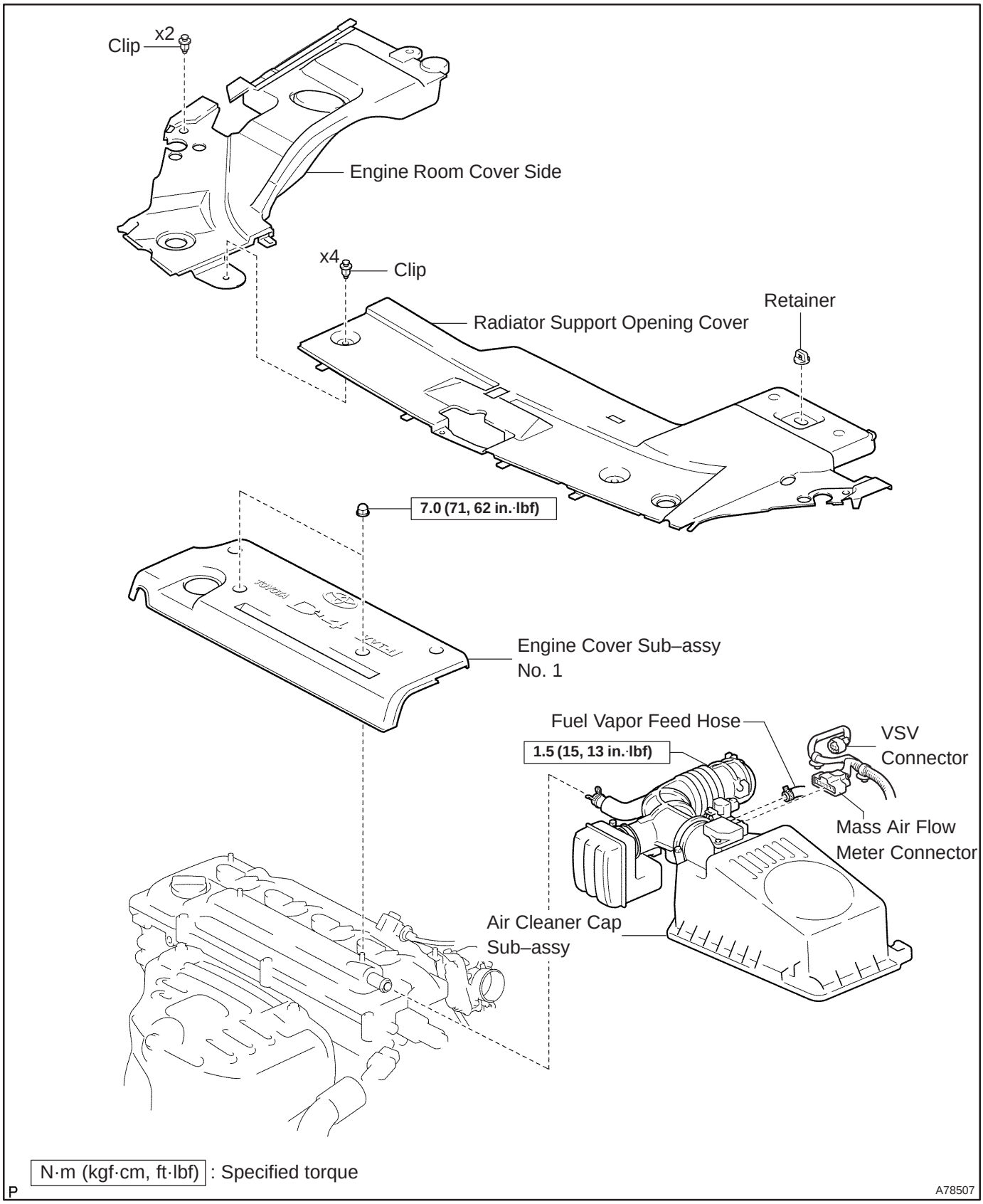

cardiagn.com

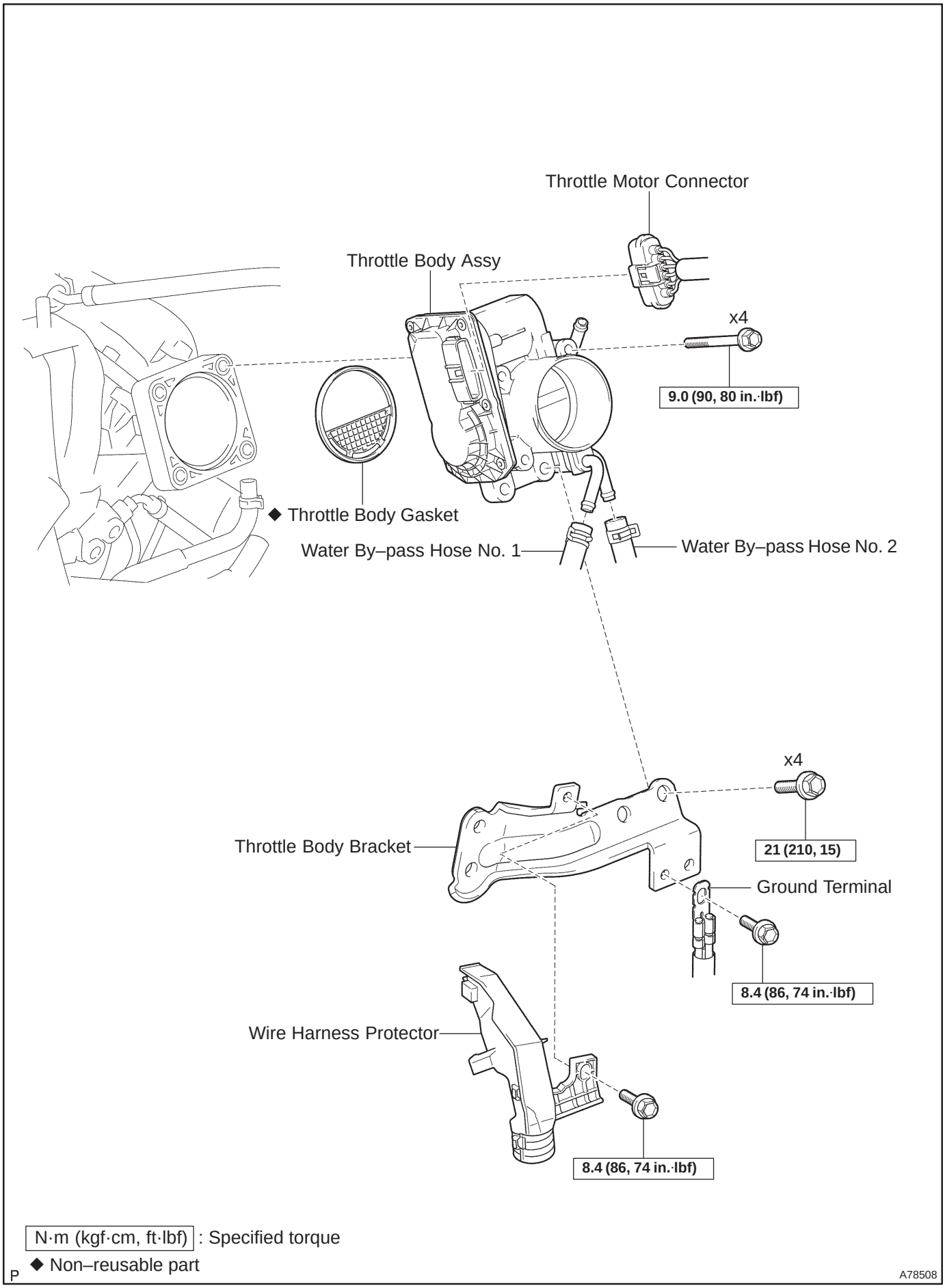

cardiagn.com

100FJ–01

REPLACEMENT

1. **REMOVE ENGINE ROOM COVER SIDE (See page 10–26)**
2. **REMOVE RADIATOR SUPPORT OPENING COVER (See page 10–26)**
3. **DRAIN ENGINE COOLANT (See page 16–31)**

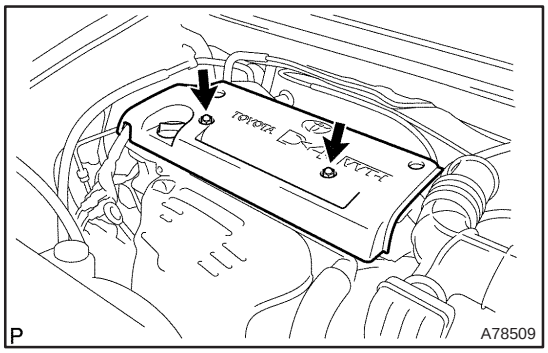

4. **REMOVE ENGINE COVER SUB–ASSY NO.1**

(a) Remove the 2 nuts, and then remove the engine cover No. 1.

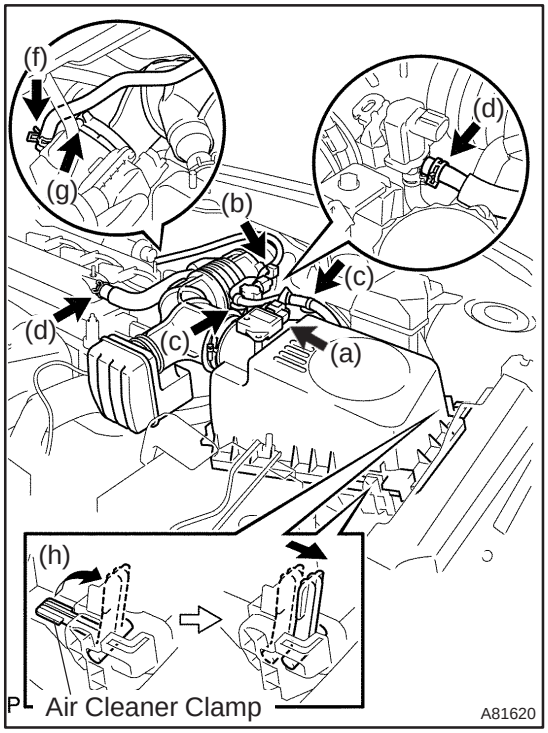

5. **REMOVE AIR CLEANER CAP SUB–ASSY**

(a) Disconnect the mass air flow meter connector.
(b) Disconnect the VSV connector.
(c) Remove the 2 wire harness clamps.
(d) Disconnect the ventilation hose.
(e) Disconnect the fuel vapor feed hose No. 1.
(f) Disconnect the fuel vapor feed hose No. 2.
(g) Loosen the hose clamp bolt.
(h) Raise the air cleaner clamp up, slide it to the air cleaner cap.
(i) Remove the air cleaner cap together with the air cleaner hose No. 1.

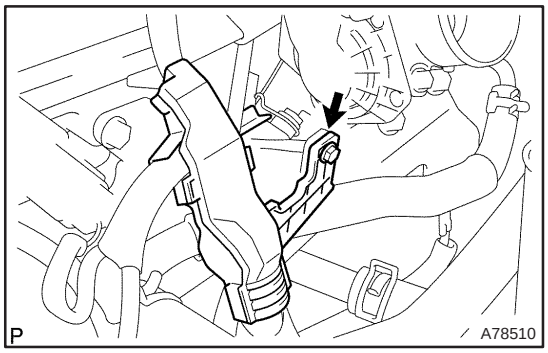

6. **REMOVE THROTTLE BODY ASSY**

(a) Remove the bolt, and then remove the wire harness protector.

cardiagn.com

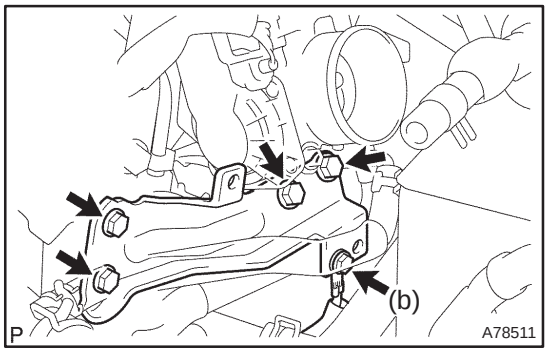

(b) Remove the bolt, and then remove the ground terminal.
(c) Remove the 4 bolts, and then remove the throttle body bracket.

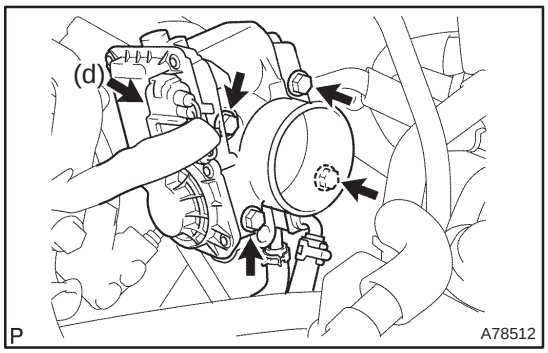

(d) Disconnect the throttle motor connector.
(e) Remove the 4 bolts, and then remove the throttle body.
(f) Remove the gasket from the intake manifold.

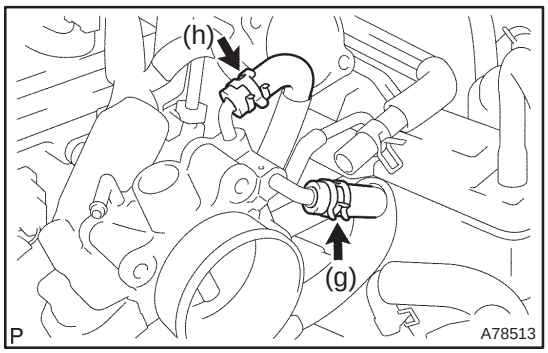

(g) Disconnect the water by–pass hose No. 1.
(h) Disconnect the water by–pass hose No. 2.

7. INSTALL THROTTLE BODY ASSY

(a) Connect the water by–pass hose No. 2.
(b) Connect the water by–pass hose No. 1.
(c) Install a new gasket to the intake manifold.
(d) Install the throttle body with the 4 bolts.
Torque: 9.0 N·m (90 kgf·cm, 80 in.·lbf)
(e) Connect the throttle motor connector.
(f) Install the throttle body bracket with the 4 bolts.
Torque: 21 N·m (210 kgf·cm, 15 ft·lbf)
(g) Install the ground terminal with the bolt.
Torque: 8.4 N·m (86 kgf·cm, 74 in.·lbf)
(h) Install the wire harness protector with the bolt.
Torque: 8.4 N·m (86 kgf·cm, 74 in.·lbf)

8. INSTALL AIR CLEANER CAP SUB–ASSY
Torque: 1.5 N·m (15 kgf·cm, 13 in.·lbf)

9. INSTALL ENGINE COVER SUB–ASSY NO.1
Torque: 7.0 N·m (71 kgf·cm, 62 in.·lbf)

10. ADD ENGINE COOLANT (See page 16–31)

11. CHECK FOR ENGINE COOLANT LEAKS (See page 16–25)

12. INSTALL ENGINE ROOM COVER SIDE

cardiagn.com

13. INSTALL RADIATOR SUPPORT OPENING COVER

cardiagn.com

THROTTLE BODY ASSY (1ZZ–FE)

COMPONENTS

100FB–01

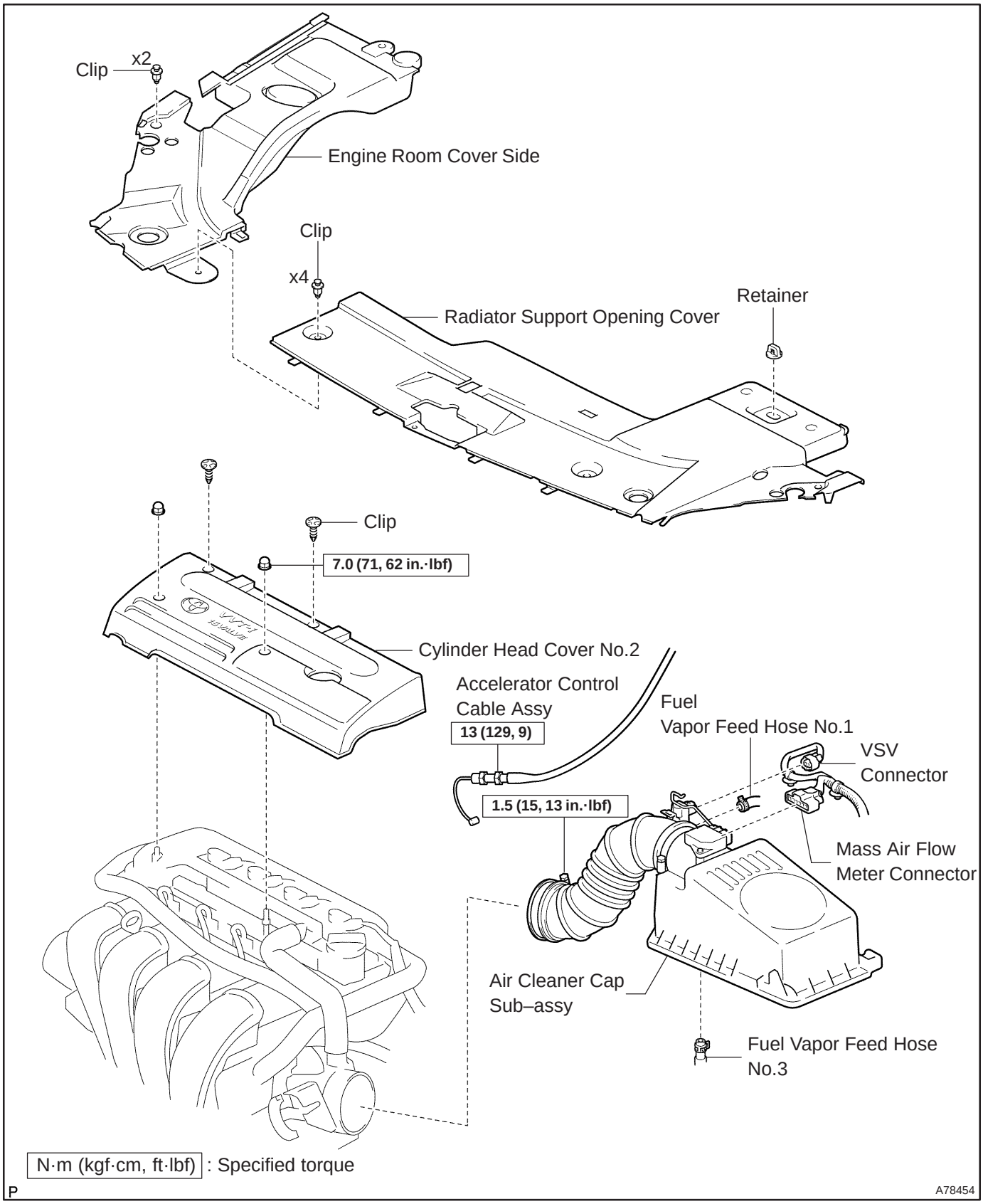

cardiagn.com

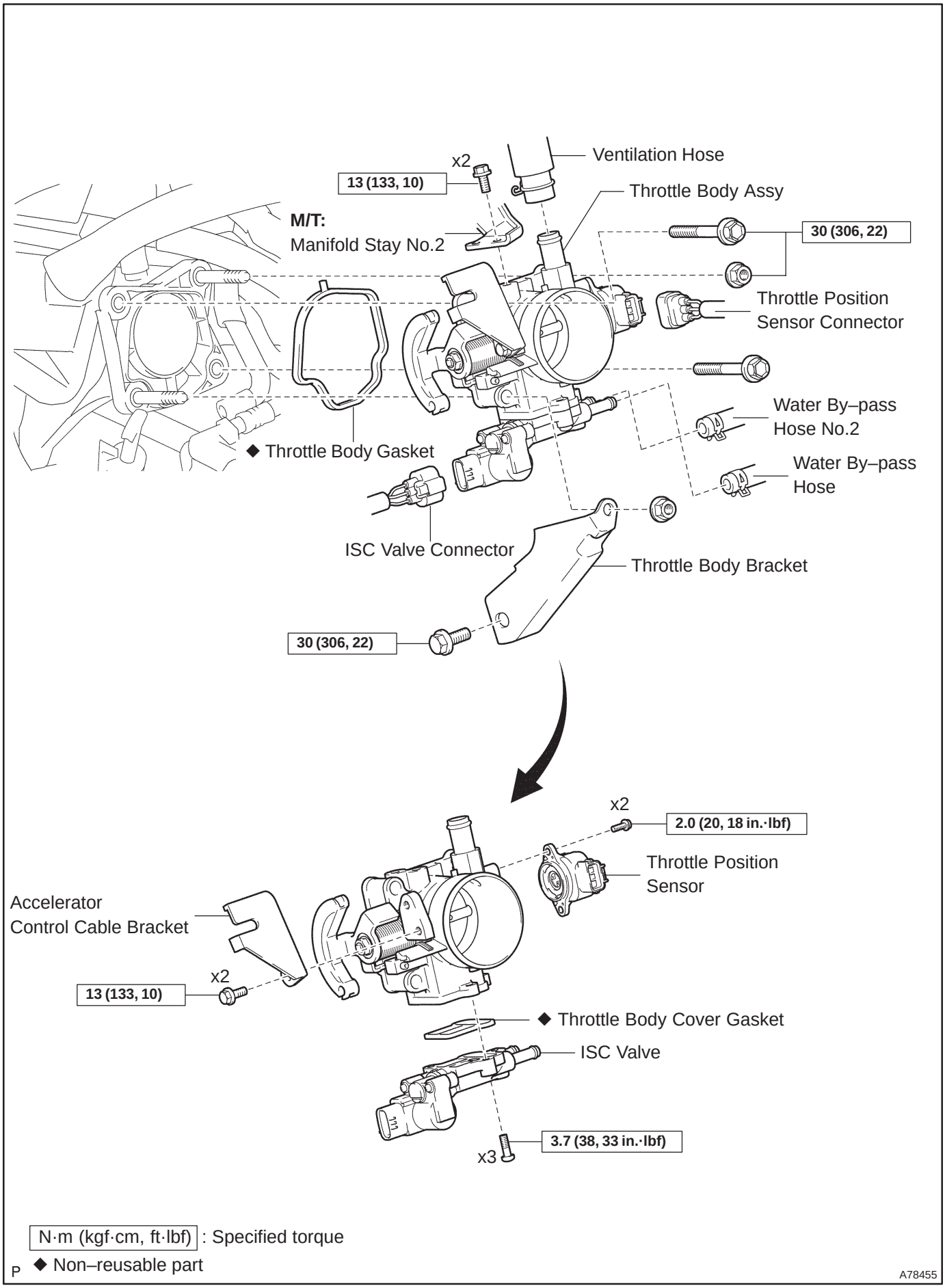

cardiagn.com

100FC–01

Removal & Installation and Disassembly & Reassembly

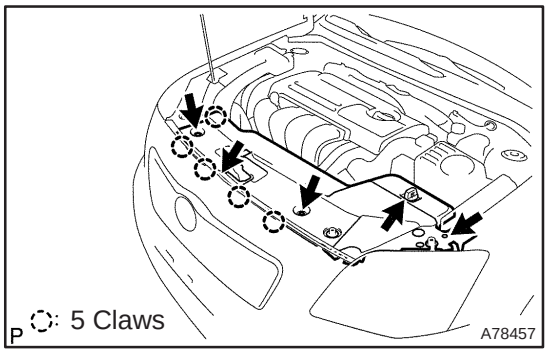

1. REMOVE RADIATOR SUPPORT OPENING COVER

(a) Remove the retainer and 4 clips.

(b) Unfasten the 5 claws and remove the radiator support opening cover.

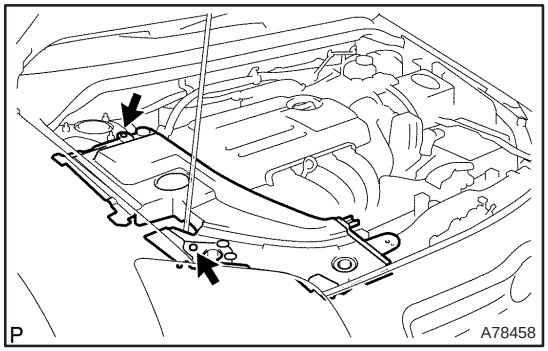

2. REMOVE ENGINE ROOM COVER SIDE

(a) Remove the 2 clips, and then remove the engine room cover side.

3. DRAIN ENGINE COOLANT (See page 16–7)

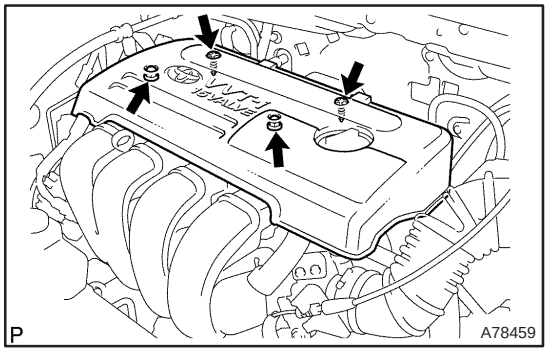

4. REMOVE CYLINDER HEAD COVER NO.2

(a) Remove the 2 nuts and 2 clips, and then remove the cylinder head cover No. 2.

cardiagn.com

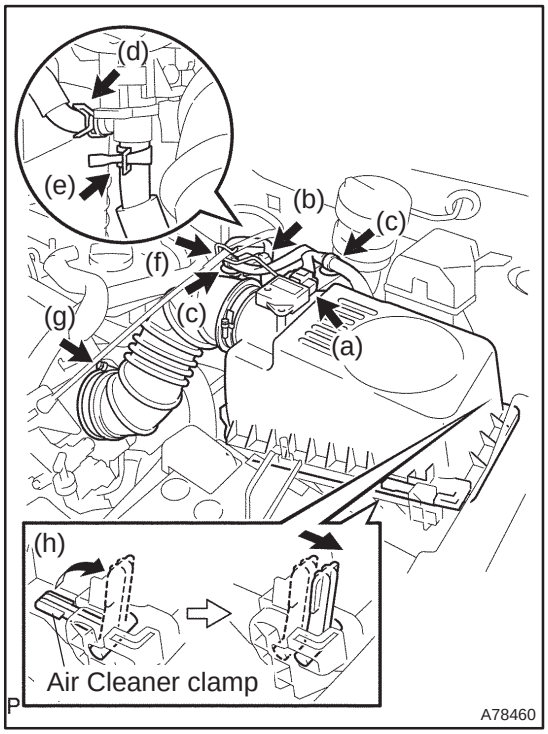

5. REMOVE AIR CLEANER CAP SUB–ASSY

(a) Disconnect the mass air flow meter connector.
(b) Disconnect the VSV connector.
(c) Remove the 2 wire harness clamps.
(d) Disconnect the fuel vapor feed hose No. 1.
(e) Disconnect the fuel vapor feed hose No. 3.
(f) Remove the accelerator control cable from the accelerator control cable support No. 2.
(g) Loosen the hose clamp.
(h) Raise the air cleaner clamp up, slide it to the air cleaner cap.
(i) Remove the air cleaner cap together with the air cleaner hose No. 1.

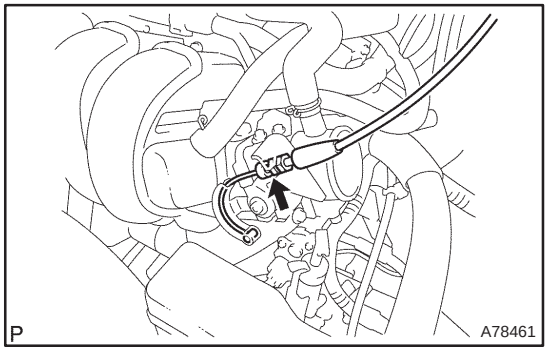

6. SEPARATE ACCELERATOR CONTROL CABLE ASSY

(a) Loosen the nut and separate the accelerator control cable.

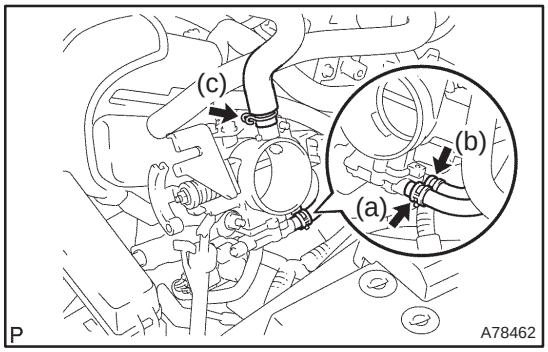

7. REMOVE THROTTLE BODY ASSY

(a) Disconnect the water by–pass hose.
(b) Disconnect the water by–pass hose No. 2.
(c) Disconnect the ventilation hose.

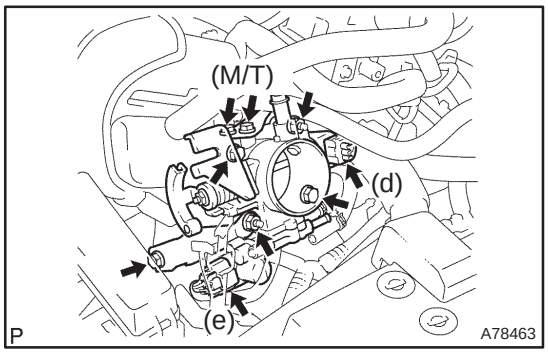

(d) Disconnect the throttle position sensor connector.
(e) Disconnect the ISC valve connector.
(f) Remove the 3 bolts and 2 nuts, and then remove the throttle body bracket and the throttle body. (A/T)
(g) Remove the 5 bolts and 2 nuts, and then remove the throttle body bracket and the throttle body. (M/T)
(h) Remove the gasket from the intake manifold.

cardiagn.com

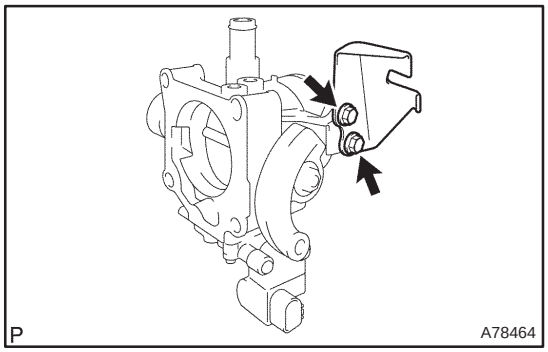

8. REMOVE ACCELERATOR CONTROL CABLE BRACKET

(a) Remove the 2 bolts, and then remove the accelerator control cable bracket.

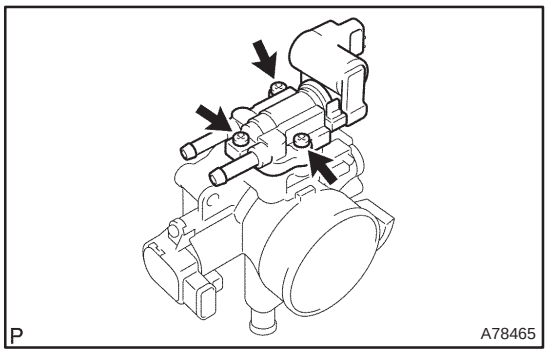

9. REMOVE ISC VALVE

(a) Remove the 3 screws, and then remove the ISC valve.

(b) Remove the gasket from the throttle body.

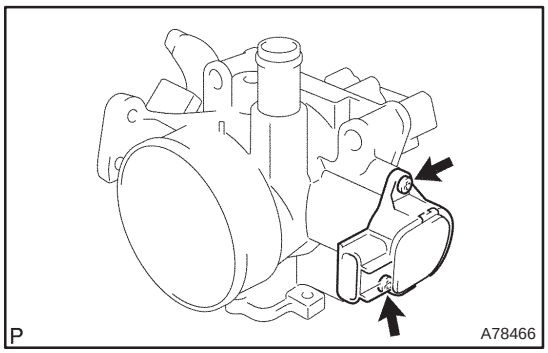

10. REMOVE THROTTLE POSITION SENSOR

(a) Remove the 2 screws, and then remove the throttle position sensor.

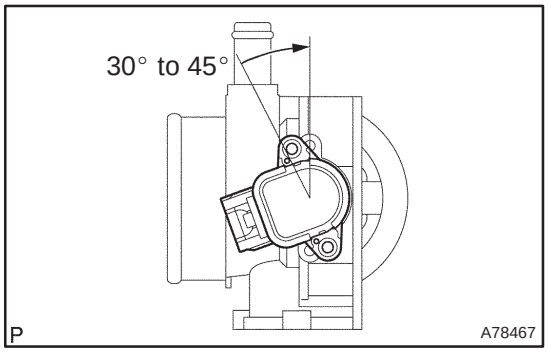

11. INSTALL THROTTLE POSITION SENSOR

(a) Make sure that the throttle valve is fully closed.

(b) With the throttle position sensor rotated 30° to 45° counterclockwise about the fully closed position of the throttle valve, install the throttle position sensor to the throttle body.

(c) Rotate the throttle position sensor clockwise and secure it with the 2 screws.

Torque: 2.0 N·m (20 kgf·cm, 18 in.·lbf)

12. INSTALL ISC VALVE

(a) Install a new gasket to the throttle body.

(b) Install the ISC valve with the 3 screws.

Torque: 3.7 N·m (38 kgf·cm, 33 in.·lbf)

13. INSTALL ACCELERATOR CONTROL CABLE BRACKET

Torque: 13 N·m (133 kgf·cm, 10 ft·lbf)

cardiagn.com

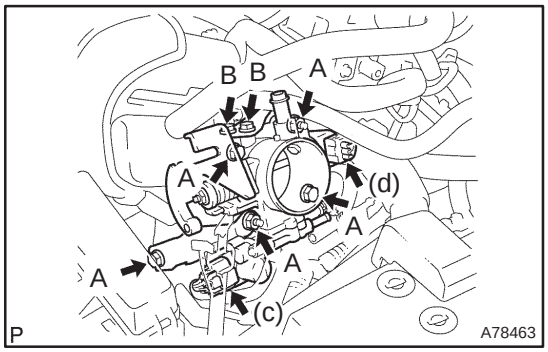

14. INSTALL THROTTLE BODY ASSY

(a) Install a new gasket to the intake manifold.

(b) Install the throttle body and the throttle body bracket with the 3 bolts and 2 nuts. (A/T)
Torque:
30 N·m (306 kgf·cm, 22 ft·lbf) for bolt and nut A

(c) Install the throttle body and the throttle body bracket with the 5 bolts and 2 nuts. (M/T)
Torque:
30 N·m (306 kgf·cm, 22 ft·lbf) for bolt and nut A
13 N·m (133 kgf·cm, 10 ft·lbf) for bolt B

(d) Connect the ISC valve connector.

(e) Connect the throttle position sensor connector.

(f) Connect the ventilation hose.

(g) Connect the water by–pass hose No. 2.

(h) Connect the water by–pass hose.

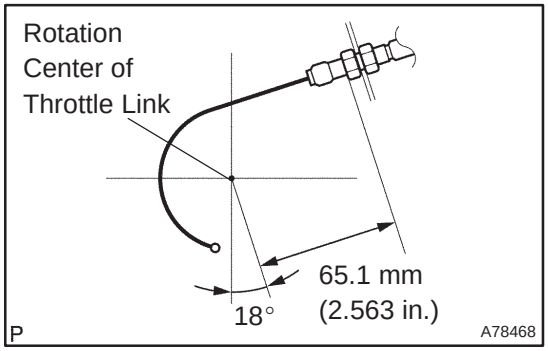

15. INSTALL ACCELERATOR CONTROL CABLE ASSY

(a) Install the accelerator control cable as shown in the illustration.
Torque: 13 N·m (129 kgf·cm, 9 ft·lbf)

16. INSTALL AIR CLEANER CAP SUB–ASSY
Torque: 1.5 N·m (15 kgf·cm, 13 in.·lbf)

17. INSTALL CYLINDER HEAD COVER NO.2
Torque: 7.0 N·m (71 kgf·cm, 62 in.·lbf)

18. ADD ENGINE COOLANT (See page 16–7)

19. CHECK FOR ENGINE COOLANT LEAKS (See page 16–1)

20. INSTALL ENGINE ROOM COVER SIDE

21. INSTALL RADIATOR SUPPORT OPENING COVER

cardiagn.com

THROTTLE BODY ASSY (3ZZ–FE)

COMPONENTS

100FD–01

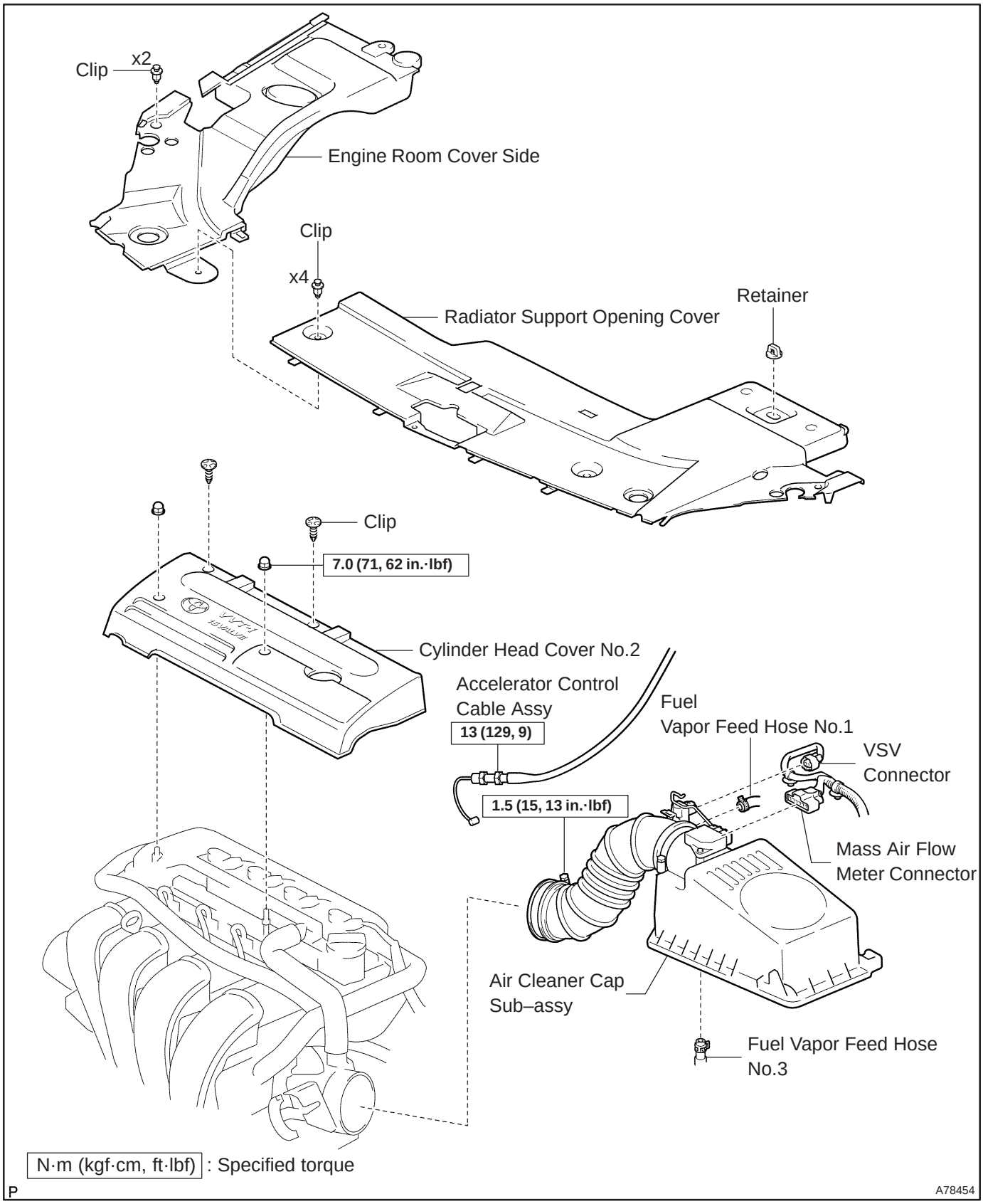

cardiagn.com

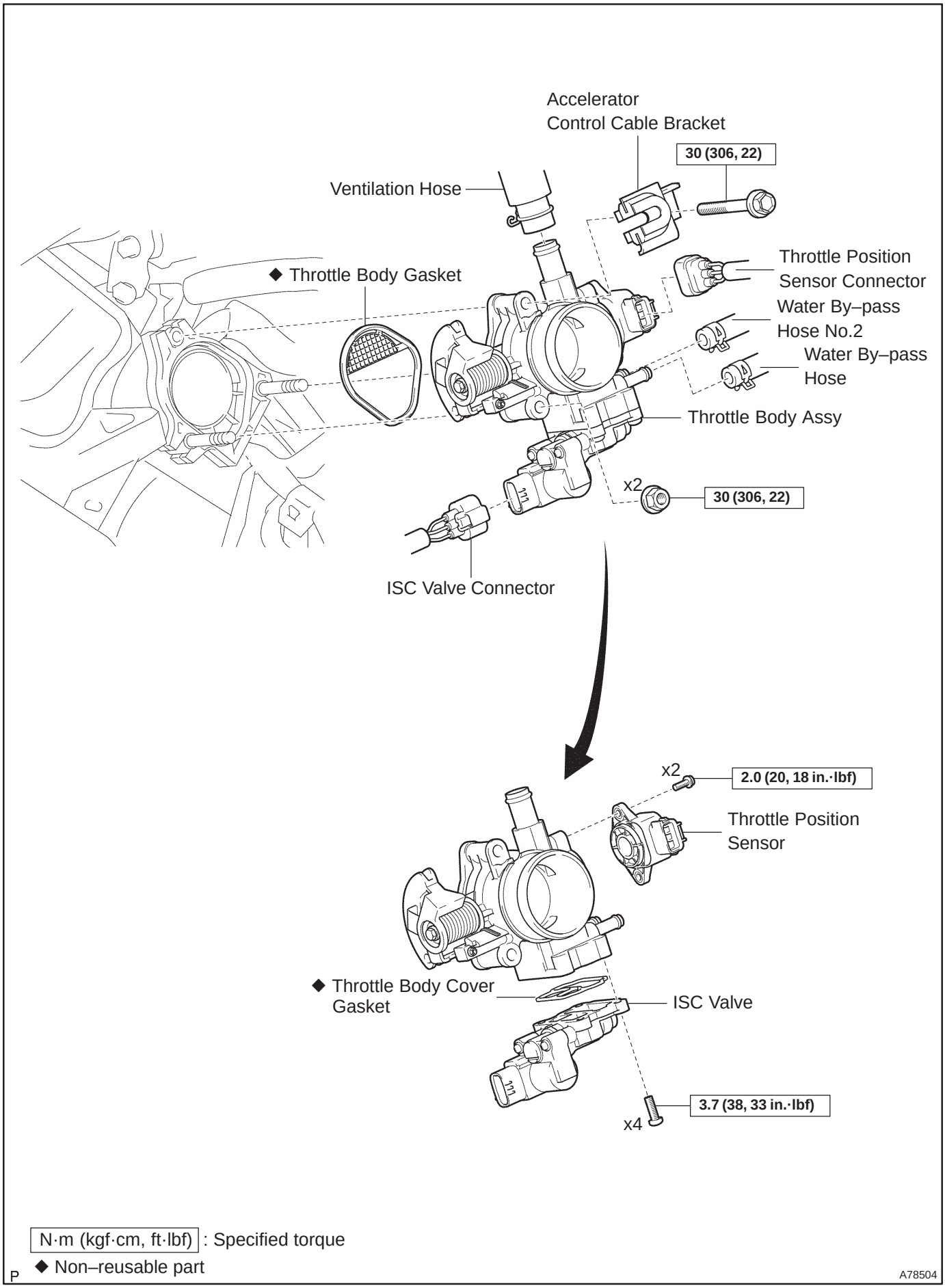

cardiagn.com

Removal & Installation and Disassembly & Reassembly

1. **REMOVE RADIATOR SUPPORT OPENING COVER (See page 10–9)**
2. **REMOVE ENGINE ROOM COVER SIDE (See page 10–9)**
3. **DRAIN ENGINE COOLANT (See page 16–7)**
4. **REMOVE CYLINDER HEAD COVER NO.2 (See page 10–9)**
5. **REMOVE AIR CLEANER CAP SUB–ASSY (See page 10–9)**

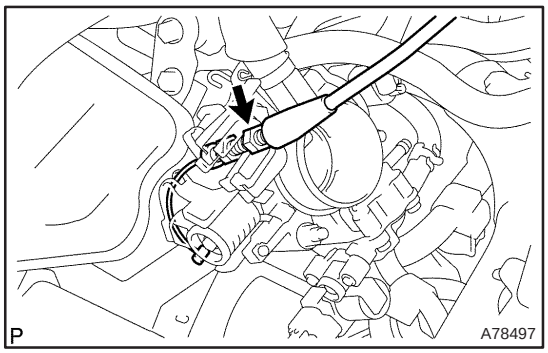

6. SEPARATE ACCELERATOR CONTROL CABLE ASSY

(a) Loosen the nut and separate the accelerator control cable.

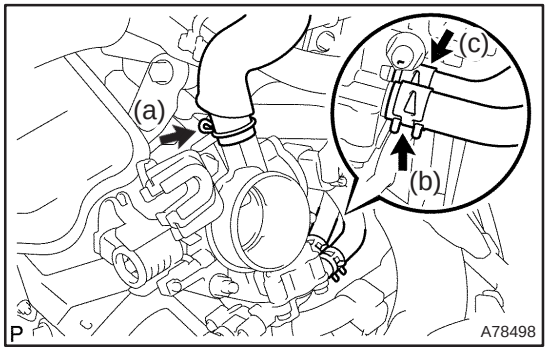

7. REMOVE THROTTLE BODY ASSY

(a) Disconnect the ventilation hose.
(b) Disconnect the water by–pass hose.
(c) Disconnect the water by–pass hose No. 2.

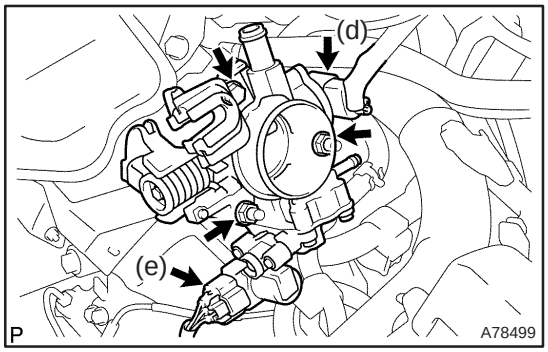

(d) Disconnect the throttle position sensor.
(e) Disconnect the ISC valve connector.
(f) Remove the bolt and 2 nuts, and then remove the accelerator control bracket and the throttle body.
(g) Remove the gasket from the intake manifold.

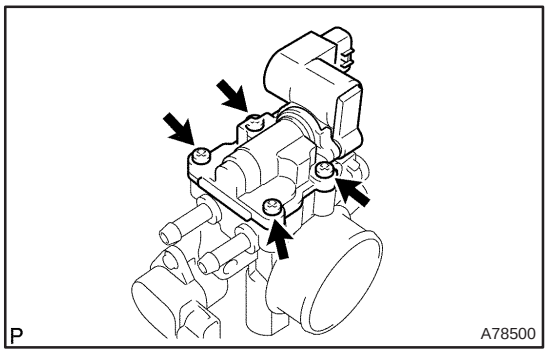

8. REMOVE ISC VALVE

(a) Remove the 4 screws, and then remove the ISC valve.
(b) Remove the gasket from the throttle body.

cardiagn.com

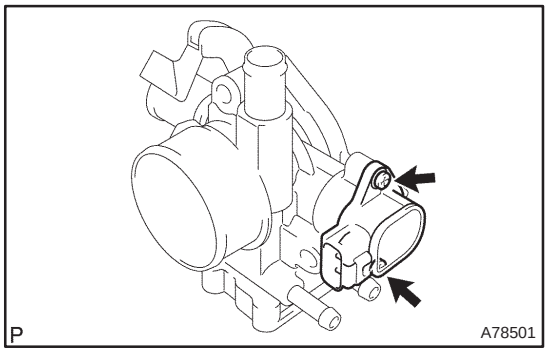

9. REMOVE THROTTLE POSITION SENSOR

(a) Remove the 2 screws, and then remove the throttle position sensor.

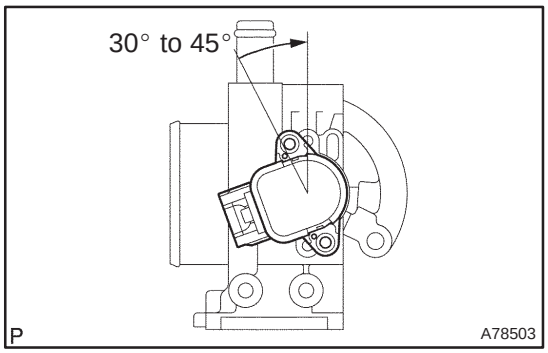

10. INSTALL THROTTLE POSITION SENSOR

(a) Make sure that the throttle valve is fully closed.

(b) With the throttle position sensor rotated 30° to 45° counterclockwise about the fully closed position of the throttle valve, install the throttle position sensor to the throttle body.

(c) Rotate the throttle position sensor clockwise and secure it with the 2 screws.
Torque: 2.0 N·m (20 kgf·cm, 18 in.·lbf)

11. INSTALL ISC VALVE

(a) Install a new gasket to the throttle body.

(b) Install the ISC valve with the 4 screws.
Torque: 3.7 N·m (38 kgf·cm, 33 in.·lbf)

12. INSTALL THROTTLE BODY ASSY

(a) Install a new gasket to the intake manifold.

(b) Install the throttle body and the accelerator control bracket with the bolt and 2 nuts.
Torque: 30 N·m (306 kgf·cm, 22 ft·lbf)

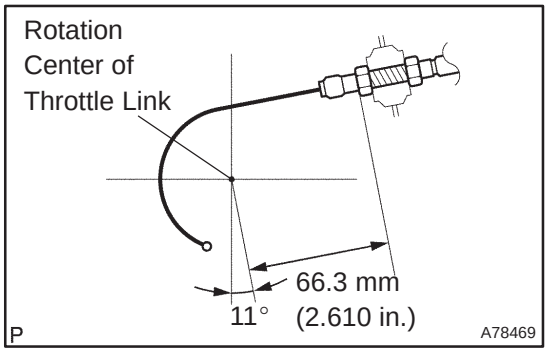

13. INSTALL ACCELERATOR CONTROL CABLE ASSY

(a) Install the accelerator control cable as shown in the illustration.
Torque: 13 N·m (129 kgf·cm, 9 ft·lbf)

14. INSTALL AIR CLEANER CAP SUB–ASSY (See page 10–9)
15. INSTALL CYLINDER HEAD COVER NO.2 (See page 10–9)
16. ADD ENGINE COOLANT (See page 16–7)
17. CHECK FOR ENGINE COOLANT LEAKS (See page 16–1)
18. INSTALL ENGINE ROOM COVER SIDE
19. INSTALL RADIATOR SUPPORT OPENING COVER

cardiagn.com